COUNTY GOVERNMENT OF KITUI

COUNTY MINISTRY OF FINANCE,ECONOMIC PLANNING AND REVENUE MANAGEMENT
EQUALIZATION FUND PROGRAMME
P.O.BOX 33-90200 KITUI

STANDARD TENDER DOCUMENT FOR PROCUREMENT OF WORKS (ROAD WORKS)

TENDER NO:CGOKTI/EQF/FRMA/001/2024-2025

TENDER NAME: PROPOSED GRADING AND CONSTRUCTION OF A DRIFT AT THUNGUTHU RIVER NGUNI-KALWA ROAD-AT MWINGI NORTH , NGOMENI WARD

CLOSE DATE: Friday, 9TH MAY,2025 12:00 Noon

CATEGORY- OPEN

ISSUED ON: THURSDAY, 24TH APRIL, 2025

TABLE OF CONTENTS

INVITATION TO TENDER .....

PART 1: TENDERING PROCEDURES .....

SECTION I – INSTRUCTIONS TO TENDERERS .....

A. GENERALPROVISIONS .....
1.0 Scope of tender .....
2.0 Fraud and corruption .....
3.0 Eligible tenderers .....
4.0 Eligible goods, equipment, and services .....
5.0 Tenderer's responsibilities .....

B. CONTENTS OF TENDER DOCUMENTS .....

6.0 Sections of Tender Document .....
7.0 Clarification of Tender Document, Site Visit, Pre-tender Meeting .....
8.0 Amendment of Tender Documents .....
10.0 Language of Tender .....
11.0 Documents Comprising the Tender .....
12.0 Form of Tender and Schedules .....
13. Alternative Tenders .....
14.0 Tender Prices and Discounts .....
15.0 Currencies of Tender and Payment .....
16.0 Documents Comprising the Technical Proposal .....
17.0 Documents Establishing the Eligibility and Qualifications of the Tenderer .....
18.0 Period of Validity of Tenders .....
19.0 Tender Security .....

20.0 Format and Signing of Tender .....

D. SUBMISSION AND OPENING OF TENDERS .....

21.0 Sealing and Marking of Tenders .....
22.0 Deadline for Submission of Tenders .....
23.0 Late Tenders .....
24.0 Withdrawal, Substitution, and Modification of Tenders .....
25. Tender Opening .....

E. EVALUATION AND COMPARISON OF TENDERS .....

26. Confidentiality .....
27.0 Clarification of Tenders .....
29.0 Determination of Responsiveness .....
30.0 non-material non-conformities .....
31.0 Arithmetical Errors .....
33.0 Margin of Preference and Reservations .....
34.0 Nominated Subcontractors .....

35. Evaluation of Tenders .....
36.0 Comparison of tenders .....
37.0 Abnormally low tenders and abnormally high tenders .....
Abnormally Low Tenders .....
Abnormally high tenders .....
38.0 Unbalanced and/or front-loaded tenders14

39.0 Qualifications of the tenderer.....
40.0 Lowest evaluated tender .....
41.0 Procuring entity's right to accept any tender, and to reject any or all tenders.....

F. **AWARD OF CONTRACT** .....

42.0 Award criteria.....
43.0 Notice of intention to enter into a contract .....
44.0 Standstill Period.....
44.0 Standstill Period.....
45.0 Debriefing by The Procuring Entity 16
46.0 Letter of Award.....
47.0 Signing of Contract.....
48.0 Performance Security.....
49.0 Publication of Procurement Contract.....
50.0 Procurement related Complaints and Administrative Review .....

SECTION II – TENDER DATA SHEET(TDS) .....

SECTION III - EVALUATION AND QUALIFICATION CRITERIA .....

1. General Provisions.....
2. Preliminary examination for Determination of Responsiveness.....
3. Tender Evaluation .....
4. Multiple Contracts .....
5. Alternative Tenders .....
6. Margin of Preference .....
7. Post qualification and Contract award .....

SECTION IV –TENDERING FORMS.....

QUALIFICATION FORMS.....

1. FOREIGN TENDERERS40% RULE .....
3. Form EQU: EQUIPMENT .....
4. FORM PER -1 .....
5. FORM PER- 2: .....
6. TENDERERS QUALIFICATION WITHOUT PRE-QUALIFICATION .....
6.1 FORM ELI -1.1.....
6.2 FORM ELI -1.2.....
6.3 FORM CON– 2.....
6.4 FORM FIN– 3.1:.....
6.5 FORM FIN– 3.2:.....
6.6 FORM FIN– 3.3:.....
6.7 FORM FIN– 3.4:.....
6.8 FORM EXP- 4.1 .....

6.9 FORM EXP- 4.2 (a).....
6.10 FORM EXP- 4.2 (b) .....

OTHER FORMS .....

7. FORM OF TENDER .....
a) TENDERER'S ELIGIBILITY- CONFIDENTIAL BUSINESS QUESTIONNAIRE .....
b) CERTIFICATE OF INDEPENDENT TENDER DETERMINATION .....
c) SELF-DECLARATION FORM - SELF DECLARATION OF THE TENDERER .....
d) APPENDIX 1- FRAUD AND CORRUPTION .....

8. FORM OF TENDER SECURITY – DEMAND BANK GUARANTEE .....
9. FORM OF TENDER SECURITY (INSURANCE GUARANTEE) .....
10. FORM OFTENDER-SECURING DECLARATION. .....
11. APPENDIXTOTENDER .....

TECHNICAL PROPOSAL FORMS .....

12. Site Organization .....
13. Method Statement .....
14 Mobilization Schedule .....
15 Construction Schedule .....

PART 2–WORKS' REQUIREMENTS .....

SECTION V – BILL OF QUANTITIES .....
1. Objectives .....
2. Content .....
3. Preamble .....
4. Rock .....
5. Work Items .....
6. Quantities .....
7. Units of Measurement .....
8. Ground and Excavation Levels .....
9. Daywork Schedule .....
10. Provisional Quantities and Sums .....
11. Summary .....
12 Sample Bills of Quantities .....
A. Preamble .....
B. Work Items .....
C. Schedule of Daywork Rates .....
12. Grand Summary .....

SECTION VI- SPECIFICATIONS .....

SECTION VII- DRAWINGS .....

SUPPLEMENTARY INFORMATION .....

PART 3 – CONDITIONS OF CONTRACT AND CONTRACT FORMS .....

SECTION VIII - GENERAL CONDITIONS OF CONTRACT.....

1. GENERAL CONDITIONS.....
2. THE PROCURING ENTITY .....
3. THE ENGINEER.....
4. THE CONTRACTOR.....
5. NOMINATED SUB CONTRACTORS .....
6. STAFFAND LABOR.....
7. Plant, Materials and Workmanship .....
8. COMMENCEMENT, DELAYS AND SUSPENSION .....
9. TESTS ON COMPLETION .....
10. Procuring Entity's Taking Over .....
11. Defects Liability.....
12. MEASUREMENT AND EVALUATION .....
13. VARIATIONS AND ADJUSTMENTS .....
14. Contract Price and Payment .....
15. TERMINATION BY PROCURING ENTITY.....
16. SUSPENSION AND TERMINATION BY CONTRACTOR .....
17. RISKAND RESPONSIBILITY .....
18. INSURANCE.....
19. FORCE MAJEURE .....
20. CLAIMS, DISPUTES AND ARBITRATION .....

SECTION IX - ARTICULAR CONDITIONS OF CONTRACT .....

SECTION X –CONTRACT FORMS.....

FORM No. 1 - NOTIFICATION OF INTENTION TO AWARD.....
FORM No. 2 – Request for review.....
FORM No. 3 – LETER OF AWARD.....
FORM No. 4 -CONTRACTAGREEMENT.....
FORM No. 5 - PERFORMANCE SECURITY [Option 1 - Unconditional Demand Bank Guarantee].....
FORM No. 6 - PERFORMANCE SECURITY [Option 2–Performance Bond] .....
FORM No. 7 – ADVANCE PAYMENT SECURITY .....
FORM No. 8 – RETENTION MONEY SECURITY.....
FORM No. 9 – BENEFICIAL OWNERSHIP DISCLOSURE FORM.....

INVITATION TO TENDER

Thursday, 24th April, 2025

PROCURING ENTITY:
Kitui County Government
County Ministry of Finance, Economic Planning and Revenue Management
PO Box 33,
Kitui

FINANCIER:
EQUALIZATION FUND
National Bank Building,
8th Floor, Harambee Avenue
P.O Box 4579 - 00200, Nairobi,
Kenya
E-mail: info@equalizationfund.go.ke.

PROPOSED GRADING AND CONSTRUCTION OF A DRIFT AT THUNGUTHU RIVER NGUNI-KALWA ROAD-AT MWINGI NORTH, NGOMENI WARD

The **County Ministry of Finance, Economic Planning and Revenue management** invites sealed tenders from eligible tenderers for the construction of **PROPOSED GRADING AND CONSTRUCTION OF A DRIFT AT THUNGUTHU RIVER NGUNI-KALWA ROAD-AT MWINGI NORTH, NGOMENI WARD**

Tendering will be conducted under open competitive method National using a standardized tender document. Tendering is open to all qualified and interested Tenderers.

1. Qualified and interested tenderers may obtain further information and inspect the Tender Documents during office hours *[0900 to 1700 hours]* at the address given below.

2. A complete set of tender documents may be obtained by interested tenders at **Kitui County Website: www.kitui.go.ke** or **Public Procurement Information Portal (PPIP)** through: www.tenders.go.ke **Free of Charge.**

3. Tender documents may be viewed and downloaded for free from the website **www.kitui.go.ke**. Tenderers who download the tender document must forward their particulars immediately to ***procurement@kitui.go.ke*** to facilitate any further clarification or addendum.

4. Tenders shall be quoted in Kenya Shillings and shall include all taxes.

5. Tender must be accompanied by a "tender Security" of [**KSHs 130,000**) one hundred and thirty thousand shillings only.

5. The Tenderer shall chronologically serialize all pages of the tender documents submitted.
6. Duly Completed tender document should be enclosed in plain sealed envelopes marked with tender reference number and be deposited inthe Tender Box located at ground Floor, Governor's Administration Block savani Road, Kitui Town addressed to:

COUNTY GOVERNMENT OF KITUI
Physical address: Ground Floor Governor's administration Block
P.O Box 33-90200 Kitui
Email: procurement@kitui.go.ke

Electronic Tenders **[*will not]*** be permitted.

and dropped in the Tender Box situated at the Ground **floor of Governor's Administration Block Savani Road Kitui Town** so as to be received on or before **Friday, 9th May, 2025 at 12.00 Noon**

7. Tenders will be opened immediately after the deadline date and time specified above or any deadline date and time specified later. Tenders will be publicly opened in the presence of the Tenderers' designated representatives who choose to attend at the address below.

8. Late tenders will be rejected.

9. The addresses referred to above are:

County Government of Kitui
County Ministry of Finance, Economic Planning and Revenue Management
Po Box 33-90200, Kitui, Kenya
Email Address: procurement@kitui.go.ke

A. <u>Address for obtaining further information and for purchasing tender documents</u>

Name of Procuring Entity; **County Government of Kitui,**
County Ministry of Finance, Economic Planning and Revenue Management
Box 33-90200 Kitui

(1) Physical address for hand Courier Delivery to an office or Tender Box ***at the ground floor of governor's administration block, Savani Road, Kitui town***

(2) **Postal Address:** Po Box 33-90200-Kitui

(3) Insert designation, telephone number and e-mail address of the officer to be contacted.
Ag Head, Supply Chain management services Email: procurement@kitui.go.ke.

B. <u>Address for Submission of Tenders.</u>

Name of Procuring Entity: **County Government of Kitui, County Ministry of Finance, Economic Planning and Revenue Management**

(1) Postal Address (include designation to be attentional)

COUNTY MINISTRY OF FINANCE, ECONOMIC PLANNING AND REVENUE MANAGEMENT

(2) Physical address for hand Courier Delivery to an office or Tender Box

Duly Completed tender documents are to be enclosed in plain sealed envelopes marked with tender reference number and be deposited in the Tender Box situated at the ground floor of governor's administration block, Savani road, Kitui town on or before ***Friday 9 th May, 2025 at 12:00 noon*** *to be addressed to CECM- County Ministry of Finance, Economic Planning and Revenue Management, Office of the Governor, P.O Box 33-90200 Kitui.*

C. <u>Address for Opening of Tenders.</u>

(1) Name of Procuring Entity: **Country Ministry of Finance, Economic Planning and Revenue Management**

(2) Physical address for the location Annex Administration Block First Floor, Savani Road opposite Kitui Central CDF Office

Ag. Director- Supply chain Management services
County Government of Kitui

[Authorized Official (name, designation, Signature and date)]

Name_____(*Official of the Procuring Entity issuing the invitation)*

CECM, Country Ministry of Finance, Economic Planning

and Revenue Management

Signature_____

Date_____

PART 1 - TENDERING PROCEDURES

SECTIONI-INSTRUCTIONS TO TENDERERS

A GENERALPROVISIONS

1. Scope of Tender

1.1 The Procuring Entity as defined in the Appendix to Conditions of Contract invites tenders for Works Contract as described in the tender documents. The name, identification, and number of lots (contracts) of this Tender Document are **specified in the TDS.**

2. Fraud and Corruption

2.1 The Procuring Entity requires compliance with the provisions of the Public Procurement and Asset Disposal Act, 2015, Section 62 "Declaration not to engage in corruption". The tender submitted by a person shall include a declaration that the person shall not engage in any corrupt or fraudulent practice and a declaration that the person or his or her sub-contractors are not debarred from participating in public procurement proceedings.

2.2 The Procuring Entity requires compliance with the provisions of the Competition Act 2010, regarding collusive practices in contracting. Any tenderer found to have engaged in collusive conduct shall be disqualified and criminal and/or civil sanctions may be imposed. To this effect, Tenders shall be required to complete and sign the "Certificate of Independent Tender Determination" annexed to the Form of Tender.

2.3 Tenderers shall permit and shall cause their agents (where declared or not), subcontractors, sub-consultants, service providers, suppliers, and their personnel, to permit the Procuring Entity to inspect all accounts, records and other documents relating to any initial selection process, pre-qualification process, tender submission, proposal submission, and contract performance (in the case of award), and to have them audited by auditors appointed by the Procuring Entity.

2.4 Unfair Competitive Advantage -Fairness and transparency in the tender process require that the firms or their Affiliates competing for a specific assignment do not derive a competitive advantage from having provided consulting services related to this tender. To that end, the Procuring Entity shall indicate in the **Data Sheet** and make available to all the firms together with this tender document all information that would in that respect give such firm any unfair competitive advantage over competing firms.

3. Eligible Tenderers

3.1 A Tenderer may be a firm that is a private entity, a state-owned enterprise or institution subject to ITT 3.8, or an individual or any combination of such entities in the form of a joint venture (JV) under an existing agreement or with the intent to enter into such an agreement supported by a letter of intent. In the case of a joint venture, all members shall be jointly and severally liable for the execution of the entire Contract in accordance with the Contract terms. The JV shall nominate a Representative who shall have the authority to conduct all business for and on behalf of any and all the members of the JV during the tendering process and, in the event the JV is awarded the Contract, during contract execution. Members of a joint venture may not also make an individual tender, be a subcontractor in a separate tender or be part of another joint venture for the purposes of the same Tender. The maximum number of Members shall be specified in the **TDS.**

3.2 Public Officers of the Procuring Entity, their Spouses, Child, Parent, Brothers or Sister. Child, Parent, Brother or Sister of a Spouse, their business associates or agents and firms/organizations in which they have a substantial or controlling interest shall not be eligible to tender or be awarded a contract. Public Officers are also not allowed to participate in any procurement proceedings.

3.3 A Tenderer shall not have a conflict of interest. Any tenderer found to have a conflict of interest shall be disqualified. A tenderer may be considered to have a conflict of interest for the purpose of this tendering process, if the tenderer:

a) Directly or indirectly controls, is controlled by or is under common control with another tenderer; or
b) Receives or has received any direct or indirect subsidy from another tenderer; or
c) Has the same legal representative as another tenderer; or
d) Has a relationship with another tenderer, directly or through common third parties, that puts it in a position to influence the tender of another tenderer, or influence the decisions of the Procuring Entity regarding this tendering process; or

e) Any of its affiliates participated as a consultant in the preparation of the design or technical specifications of the goods or works that are the subject of the tender; or

f) any of its affiliates has been hired (or is proposed to be hired) by the Procuring Entity as a consultant for Contract implementation; or

g) Would be providing goods, works, or non-consulting services resulting from or directly related to consulting services for the preparation or implementation of the contract specified in this Tender Document; or

h) Has a close business or personal relationship with senior management or professional staff of the Procuring Entity who has the ability to influence the bidding process and:
   i) are directly or indirectly involved in the preparation of the Tender document or specifications of the Contract, and/or the Tender evaluation process of such contract; or
   ii) may be involved in the implementation or supervision of such Contract unless the conflict stemming from such relationship has been resolved in a manner acceptable to the Procuring Entity throughout the tendering process and execution of the Contract.

3.4 A tenderer shall not be involved incorrupt, coercive, obstructive or fraudulent practice. A tenderer that is proven to have been involved in any of these practices shall be automatically disqualified.

3.5 A Tenderer (either individually or as a JV member) shall not participate in more than one Tender, except for permitted alternative tenders. This includes participation as a subcontractor in other Tenders. Such participation shall result in the disqualification of all Tenders in which the firm is involved. Members of a joint venture may not also make an individual tender, be a subcontractor in a separate tender or be part of another joint venture for the purposes of the same Tender. A firm that is not a tenderer or a JV member may participate as a subcontractor in more than one tender.

3.6 A Tenderer may have the nationality of any country, subject to the restrictions pursuant to ITT3.9. A Tenderer shall be deemed to have the nationality of a country if the Tenderer is constituted, incorporated or registered in and operates inconformity with the provisions of the laws of that country, as evidenced by its articles of incorporation (or equivalent documents of constitution or association) and its registration documents, as the case may be. This criterion also shall apply to the determination of the nationality of proposed subcontractors or sub-consultants for any part of the Contract including related Services.

3.7 A Tenderer that has been debarred from participating in public procurement shall be ineligible to tender or be awarded a contract. The list of debarred firms and individuals is available from the website of PPRA www.ppra.go.ke.

3.8 A Tenderer that is a state-owned enterprise or a public institution in Kenya may be eligible to tender and be awarded a Contract(s) only if it is determined by the Procuring Entity to meet the following conditions, i.e. if it is:
   i) A legal public entity of Government and/or public administration,
   ii) financially autonomous and not receiving any significant subsidies or budget support from any public entity or Government, and
   iii) operating under commercial law and vested with legal rights and liabilities similar to any commercial enterprise to enable it compete with firms in the private sector on an equal basis.

3.9 Firms and individuals shall be ineligible if their countries of origin are:

a) as a matter of law or official regulations, Kenya prohibits commercial relations with that country, or

b) by an act of compliance with a decision of the United Nations Security Council taken under Chapter VII of the Charter of the United Nations, Kenya prohibits any import of goods or contracting of works or services from that country, or any payments to any country, person, or entity in that country.

A tenderer shall provide such documentary evidence of eligibility satisfactory to the Procuring Entity, as the Procuring Entity shall reasonably request.

3.10 Foreign tenderers are required to source at least forty (40%) percent of their contract inputs (in supplies, local subcontracts and labor) from citizen suppliers and contractors. To this end, a foreign tenderer shall provide in its tender documentary evidence that this requirement is met. Foreign tenderers not meeting this criterion will be automatically disqualified. Information required to enable the Procuring Entity determine if this condition is met shall be provided for this purpose in *"SECTION III-EVALUATION AND QUALIFICATION CRITERIA, Item 9"*.

3.11 Pursuant to the eligibility requirements of ITT4.10, a tender is considered a foreign tenderer, if the tenderer is not registered in Kenya or if the tenderer is registered in Kenya and has less than 51 percent ownership by Kenyan citizens. JVs are considered as foreign tenderers if the individual member firms are not registered in Kenya or if are registered in Kenya and have less than 51 percent ownership by Kenyan citizens. The JV shall not subcontract to foreign firms more than 10 percent of the contract price, excluding provisional sums.

3.12 The National Construction Authority Act of Kenya requires that all local and foreign contractors be registered with the National Construction Authority and be issued with a Registration Certificate before they can undertake any construction works in Kenya. Registration shall not be a condition for tender, but it shall be a condition of contract award and signature. A selected tenderer shall be given opportunity to register before such award and signature of contract. Application for registration with National Construction Authority may be accessed from the website www.nca.go.ke.

3.13 The Competition Act of Kenya requires that firms wishing to tender as Joint Venture undertakings which may prevent, distort or lessen competition in provision of services are prohibited unless they are exempt in accordance with the provisions of Section 25 of the Competition Act, 2010. JVs will be required to seek for exemption from the Competition Authority. Exemption shall not be a condition for tender, but it shall be a condition of contract award and signature. A JV tenderer shall be given opportunity to seek such exemption as a condition of award and signature of contract. Application for exemption from the Competition Authority of Kenya may be accessed from the website www.cak.go.ke.

4.14 A Kenyan tenderer shall be eligible to tender if it provides evidence of having fulfilled his/her tax obligations by producing a valid tax compliance or valid tax certificate issued by the Kenya Revenue Authority.

4. Eligible Goods, Equipment, and Services

4.1 Goods, equipment and services to be supplied under the Contract may have their origin in any country that is not ineligible under ITT3.9. At the Procuring Entity's request, Tenderers may be required to provide evidence of the origin of Goods, equipment and services.

4.2 Any goods, works and production processes with characteristics that have been declared by the relevant national environmental protection agency or by other competent authority as harmful to human beings and to the environment shall not be eligible for procurement.

5. Tenderer's Responsibilities

5.1 The tenderer shall bear all costs associated with the preparation and submission of his/her tender, and the Procuring Entity will in no case be responsible or liable for those costs.

5.2 The tenderer, at the tenderer's own responsibility and risk, is encouraged to visit and examine and inspect the Site of the Works and its surroundings and obtain all information that may be necessary for preparing the tender and entering into a contract for construction of the Works. The costs of visiting the Site shall be at the tenderer's own expense.

5.3 The Tenderer and any of its personnel or agents will be granted permission by the Procuring Entity to enter up on its premises and lands for the purpose of such visit. The Tenderer shall indemnify the Procuring Entity against all liability arising from death or personal injury, loss of or damage to property, and any other losses and expenses incurred as a result of the examination and inspection.

5.4 The tenderer shall provide in the Form of Tender and Qualification Information, a preliminary description of the proposed work method and schedule, including charts, as necessary or required.

B. CONTENTS OF TENDER DOCUMENTS

6. Sections of Tender Document

6.1 The tender document consists of Parts 1, 2, and 3, which includes all the sections specified below, and which should be read in conjunction with any Addenda issued in accordance with ITT10.

PART 1: **Tendering Procedures**
Section I: Instructions to Tenderers
Section II: Tender Data Sheet
(TDS)

Section III: Evaluation and Qualification
Criteria Section IV: Tendering Forms

PART 2: **Works' Requirements**
Section V: Bills of Quantities
Section VI: Specifications
Section VII: Drawings

PART3: **Conditions of Contract and Contract Forms** Section VIII: General Conditions (GCC)
Section IX: Particular Conditions of Contract Section
X: Contract Forms

6.2 The Invitation to Tender Notice issued by the Procuring Entity is not part of the Contract documents.

6.3 Unless obtained directly from the Procuring Entity, the Procuring Entity is not responsible for the completeness of the Tender document, responses to requests for clarification, the minutes of a pre-arranged site visit and those of the pre-Tender meeting (if any), or Addenda to the Tender document in accordance with ITT 10. In case of any contradiction, documents obtained directly from the Procuring Entity shall prevail.

6.4 The Tenderer is expected to examine all instructions, forms, terms, and specifications in the Tender Document and to furnish with its Tender all information and documentation as is required by the Tender document.

7. Clarification of Tender Document, Site Visit, Pre-Tender Meeting

7.1 A Tenderer requiring any clarification of the Tender Document shall contact the Procuring Entity in writing at the Procuring Entity's address **specified in the TDS** or raise its enquiries during the pre-Tender meeting if provided for in accordance with ITT 7.2. The Procuring Entity will respond in writing to any request for clarification, provided that such request is received no later than the period specified in the **TDS p**rior to the deadline for submission of tenders. The Procuring Entity shall forward copies of its response to all tenderers who have acquired the Tender D documents in accordance with ITT 7.4, including a description of the inquiry but without identifying its source. If so specified **in the TDS**, the Procuring Entity shall also promptly publish its response at the web page identified in the **TDS**. Should the clarification result in changes to the essential elements of the Tender Documents, the Procuring Entity shall amend the Tender Documents following the procedure under ITT 8 and ITT 22.2.

7.2 The Tenderer, at the Tenderer's own responsibility and risk, is encouraged to visit and examine and inspect the site(s) of the required contracts and obtain all information that may be necessary for preparing a tender. The costs of visiting the Site shall be at the Tenderer's own expense. The Procuring Entity shall specify in the **TDS** if a pre- arranged Site visit and or a pre-tender meeting will be held, when and where. The Tenderer's designated representative is invited to attend a pre-arranged site visit and a pre-tender meeting, as the case may be. The purpose of the site visit and the pre-tender meeting will be to clarify issues and to answer questions on any matter that may be raised at that stage.

7.3 The Tenderer is requested to submit any questions in writing, to reach the Procuring Entity not later than the period specified in the **TDS** before the meeting.

7.4 Minutes of a pre-arranged site visit and those of the pre-tender meeting, if applicable, including the text of the questions asked by Tenderers and the responses given, together with any responses prepared after the meeting, will be transmitted promptly to all Tenderers who have acquired the Tender Documents. Minutes shall not identify the source of the questions asked.

7.5 The Procuring Entity shall also promptly publish anonymized (*no names*) Minutes of the pre-arranged site visit and those of the pre-tender meeting at the web page identified **in the TDS**. Any modification to the Tender Documents that may become necessary as a result of the pre-arranged site visit and those of the pre-tender meeting shall be made by the Procuring Entity exclusively through the issue of an Addendum pursuant to ITT 8 and not through the minutes of the pre-Tender meeting. Non-attendance at the pre-arranged site visit and the pre-tender meeting will not be a cause for disqualification of a Tenderer.

8. Amendment of Tender Documents

8.1 At any time prior to the deadline for submission of Tenders, the Procuring Entity may amend the Tender Documents by issuing addenda.

8.2 Any addendum issued shall be part of the Tender Documents and shall be communicated in writing to all who have obtained the Tender Documents from the Procuring Entity. The Procuring Entity shall also promptly publish the addendum on the Procuring Entity's website in accordance with ITT 7.5.

8.3 To give Tenderers reasonable time in which to take an addendum into account in preparing their Tenders, the Procuring Entity should extend the deadline for the submission of Tenders, pursuant to ITT 22.2.

C. PREPARATION OF TENDERS

9. Cost of Tendering

The Tenderer shall meet all costs associated with the preparation and submission of its Tender, and the Procuring Entity shall not be responsible or liable for those costs, regardless of the conduct or outcome of the tendering process.

10. Language of Tender

The Tender, as well as all correspondence and documents relating to the tender exchanged by the tenderer and the Procuring Entity, shall be written in the English Language. Supporting documents and printed literature that are part of the Tender may be in another language provided they are accompanied by an accurate and notarized translation of the relevant passages into the English Language**,** in which case, for purposes of interpretation of the Tender, such translation shall govern.

11. Documents Comprising the Tender

11.1 The Tender shall comprise the following:

a) Form of Tender prepared in accordance with ITT 12;
b) Schedules including priced Bill of Quantities, completed in accordance with ITT 12 and ITT 14;
c) Tender Security or Tender-Securing Declaration, in accordance with ITT 19.1;
d) Alternative Tender, if permissible, in accordance with ITT 13;
e) Authorization: written confirmation authorizing the signatory of the Tender to commit the Tenderer, in accordance with ITT 20.3;
f) Qualifications: documentary evidence in accordance with ITT 17 establishing the Tenderer's qualifications to perform the Contract if its Tender is accepted;
g) Conformity: a technical proposal in accordance with ITT 16;
h) Any other document required in the **TDS**.

11.2 In addition to the requirements under ITT 11.1, Tenders submitted by a JV shall include a copy of the Joint Venture Agreement entered into by all members. Alternatively, a letter of intent to execute a Joint Venture Agreement in the event of a successful Tender shall be signed by all members and submitted with the Tender, together with a copy of the proposed JV Agreement. Change of membership and conditions of the JV prior to contract signature will render the tender liable for disqualification.

12. Form of Tender and Schedules

12.1 The Form of Tender and Schedules, including the Bill of Quantities, shall be prepared using the relevant forms furnished in Section IV, Tendering Forms. The forms must be completed without any alterations to the text, and no substitutes shall be accepted except as provided under ITT 20.3. All blank spaces shall be filled in with the information requested. The Tenderer shall chronologically serialize all pages of the tender documents submitted.

12.2 The Tenderer shall furnish in the Form of Tender information on commissions and gratuities, if any, paid or to be paid to agents or any other party relating to this Tender.

13. Alternative Tenders

13.1 Unless otherwise specified in the TDS, alternative Tenders shall not be considered.

13.2 When alternative times for completion are explicitly invited, a statement to that effect will be included in the **TDS**, and the method of evaluating different alternative times for completion will be described in Section III, Evaluation and Qualification Criteria.

13.3 Except as provided under ITT13.4 below, Tenderers wishing to offer technical alternatives to the requirements of the Tender Documents must first price the Procuring Entity's design as described in the Tender Documents and shall further provide all information necessary for a complete evaluation of the alternative by the Procuring Entity, including drawings, design calculations, technical specifications, breakdown of prices, and proposed construction methodology and other relevant details. Only the technical alternatives, if any, of the Tenderer with the Winning Tender conforming to the basic technical requirements shall be considered by the Procuring Entity.

13.4 When specified in the **TDS**, Tenderers are permitted to submit alternative technical solutions for specified parts of the Works, and such parts will be identified in the **TDS**, as will the method for their evaluating, and described in Section VII, Works' Requirements.

14. Tender Prices and Discounts

14.1 The prices and discounts (including any price reduction) quoted by the Tenderer in the Form of Tender and in the Bill of Quantities shall conform to the requirements specified below.

14.2 The Tenderer shall fill in rates and prices for all items of the Works described in the Bill of Quantities. Items against which no rate or price is entered by the Tenderer shall be deemed covered by the rates for other items in the Bill of Quantities and will not be paid for separately by the Procuring Entity. An item not listed in the priced Bill of Quantities shall be assumed to be not included in the Tender, and provided that the Tender is determined substantially responsive notwithstanding this omission, the average price of the item quoted by substantially responsive Tenderers will be added to the Tender price and the equivalent total cost of the Tender so determined will be used for price comparison.

14.3 The price to be quoted in the Form of Tender, in accordance with ITT 12, shall be the total price of the Tender, including any discounts offered.

14.4 The Tenderer shall quote any discounts and the methodology for their application in the Form of Tender, in accordance with ITT 12

14.5 It will be specified in the **TDS** if the rates and prices quoted by the Tenderer are or are not subject to adjustment during the performance of the Contract in accordance with the provisions of the Conditions of Contract, excepting cases where the contract is subject to fluctuations and adjustments, not fixed price. In such a case, the Tenderer shall furnish the indices and weightings for the price adjustment formulae in the Schedule of Adjustment Data and the Procuring Entity may require the Tenderer to justify its proposed indices and weightings.

14.6 Where tenders are being invited for individual lots (contracts) or for any combination of lots (packages), tenderers wishing to offer discounts for the award of more than one Contract shall specify in their Tender the price reductions applicable to each package, or alternatively, to individual Contracts within the package. Discounts shall be submitted in accordance with ITT 14.4, provided the Tenders for all lots (contracts) are opened at the same time.

14.7 All duties, taxes, and other levies payable by the Contractor under the Contract, or for any other cause, as of the date 30 days prior to the deadline for submission of Tenders, shall be included in the rates and prices and the total Tender Price submitted by the Tenderer.

15. Currencies of Tender and Payment

15.1 The currency (ies) of the Tender and the currency (ies) of payments shall be the same**.**

15.2 Tenderers shall quote entirely in Kenya Shillings. The unit rates and the prices shall be quoted by the Tenderer in the Bill of Quantities, entirely in Kenya shillings

a) A Tenderer expecting to incur expenditures in other currencies for inputs to the Works supplied from

outside Kenya (referred to as "the foreign currency requirements") shall (if so allowed in the **TDS**) indicate in the Appendix to Tender the percentage(s) of the Tender Price (excluding Provisional Sums), needed by the Tenderer for the payment of such foreign currency requirements, limited to no more than two foreign currencies.

b) The rates of exchange to be used by the Tenderer in arriving at the local currency equivalent and the percentage(s) mentioned in (a) above shall be specified by the Tenderer in the Appendix to Tender and shall be based on the exchange rate provided by the Central Bank of Kenya on the date 30 days prior to the actual date of tender opening. Such exchange rate shall apply for all foreign payments under the Contract.

15.3 Tenderers may be required by the Procuring Entity to justify, to the Procuring Entity's satisfaction, their local and foreign currency requirements, and to substantiate that the amounts included in the unit rates and prices and shown in the Schedule of Adjustment Data in the Appendix to Tender are reasonable, in which case a detailed breakdown of the foreign currency requirements shall be provided by Tenderers.

16. Documents Comprising the Technical Proposal

The Tenderer shall furnish a technical proposal including a statement of work methods, equipment, personnel, schedule and any other information as stipulated in Section IV, Tender Forms, in sufficient detail to demonstrate the adequacy of the Tenderer's proposal to meet the work's requirements and the completion time.

17. Documents Establishing the Eligibility and Qualifications of the Tenderer

17.1 Tenderers shall complete the Form of Tender, included in Section IV, Tender Forms, to establish Tenderer's eligibility in accordance with ITT 4.

17.2 In accordance with Section III, Evaluation and Qualification Criteria, to establish its qualifications to perform the Contract the Tenderer shall provide the information requested in the corresponding information sheets included in Section IV, Tender Forms.

17.3 If a margin of preference applies as specified in accordance with ITT33. 1, national tenderers, individually or in joint ventures, applying for eligibility for national preference shall supply all information required to satisfy the criteria for eligibility specified in accordance with ITT 33.1.

17.4 Tenderers shall be asked to provide, as part of the data for qualification, such information, including details of ownership, as shall be required to determine whether, according to the classification established by the Procuring Entity, a particular contract or or group of contractors qualifies for a margin of preference. Further the information will enable the Procuring Entity identify any actual or potential conflict of interest in relation to the procurement and/or contract management processes, or possibility of collusion between tenderers, and there by help to prevent any corrupt influence in relation to the procurement process or contract management.

17.5 The purpose of the information described **in ITT 17.2** above overrides any claims to confidentiality which a tenderer may have. There can be no circumstances in which it would be justified for a tenderer to keep information relating to its ownership and control confidential where it is tendering to undertake public sector work and receive public sector funds. Thus, confidentiality will not be accepted by the Procuring Entity as a justification for a Tenderer's failure to disclose, or failure to provide required information on its ownership and control.

17.6 The Tenderer shall provide further documentary proof, information or authorizations that the Procuring Entity may request in relation to ownership and control which information on any changes to the information which was provided by the tenderer under ITT 6.4. The obligations to require this information shall continue for the duration of the procurement process and contract performance and after completion of the contract, if any change to the information previously provided may reveal a conflict of interest in relation to the award or management of the contract.

17.7 All information provided by the tenderer pursuant to these requirements must be complete, current and accurate as at the date of provision to the Procuring Entity. In submitting the information required pursuant to these requirements, the Tenderer shall warrant that the information submitted is complete, current and accurate as at the date of submission to the Procuring Entity.

17.8 If a tenderer fails to submit the information required by these requirements, its tenderer will be rejected. Similarly, if the Procuring Entity is unable, after taking reasonable steps, to verify to a reasonable degree the information submitted by a tenderer pursuant to these requirements, then the tender will be rejected.

17.9 If information submitted by a tenderer pursuant to these requirements, or obtained by the Procuring Entity (whether through its own enquiries, through notification by the public or otherwise), shows any conflict of interest which could materially and improperly benefit the tenderer in relation to the procurement or contract management process, then:

i) If the procurement process is still on going, the tenderer will be disqualified from the procurement process,
ii) If the contract has been awarded to that tenderer, the contract award will be set aside,
iii) The tenderer will be referred to the relevant law enforcement authorities for investigation of whether the tenderer or any other persons have committed any criminal offence.

17.10 If a tenderer submits information pursuant to these requirements that is incomplete, inaccurate or out-of-date, or attempts to obstruct the verification process, then the consequences ITT 17.8 will ensue unless the tenderer can show to the reasonable satisfaction of the Procuring Entity that any such act was not material, or was due to genuine error which was not attributable to the intentional act, negligence or recklessness of the tender.

18. Period of Validity of Tenders

18.1. Tenders shall remain valid for the Tender Validity period specified in the **TDS**. The Tender Validity period starts from the date fixed for the Tender submission deadline (as prescribed by the Procuring Entity in accordance with ITT 22). A Tender valid for a shorter period shall be rejected by the Procuring Entity as non-responsive.

18.2 In exceptional circumstances, prior to the expiration of the Tender validity period, the Procuring Entity may request Tenderers to extend the period of validity of their Tenders. The request and the responses shall be made in writing. If a Tender Security is requested in accordance with ITT 19, it shall also be extended for thirty (30) days beyond the deadline of the extended validity period. A Tenderer may refuse the request without forfeiting its Tender security. A Tenderer granting their quest shall not be required or permitted to modify its Tender.

19. Tender Security

19.1 The Tenderer shall furnish as part of its Tender, either a Tender-Securing Declaration or a Tender Security as specified in the **TDS**, in original form and, in the case of a Tender Security, in the amount and currency **specified in the TDS**. A Tender-Securing Declaration shall use the form included in Section IV, Tender Forms.

19.2 If a Tender Security is specified pursuant to ITT19.1, the Tender Security shall be a demand guarantee in any of the following forms at the Tenderer's option:

i) cash;
ii) a bank guarantee;
iii) a guarantee by an insurance company registered and licensed by the Insurance Regulatory Authority listed by the Authority; or
iv) a guarantee issued by a financial institution approved and licensed by the Central Bank of Kenya, from a reputable source, and an eligible country.

19.3 If an unconditional bank guarantee is issued by a bank located outside Kenya, the issuing bank shall have a correspondent bank located in Kenya to make it enforceable. The Tender Security shall be valid for thirty (30) days beyond the original validity period of the Tender, or beyond any period of extension if requested under ITT 18.2.

19.4 If a Tender Security or Tender-Securing Declaration is specified pursuant to ITT 19.1, any Tender not accompanied by a substantially responsive Tender Security or Tender-Securing Declaration shall be rejected by the Procuring Entity as non-responsive.

19.5 If a Tender Security is specified pursuant to ITT 19.1, the Tender Security of unsuccessful Tenderers shall be returned as promptly as possible upon the successful Tenderer's signing the Contract and furnishing the Performance Security and any other documents required in the **TDS**.The Procuring Entity shall also promptly return the tender security to the tenderers where the procurement proceedings are terminated, all tenders were determined non-responsive or a bidder declines to extend tender validity period.

19.6 The Tender Security of the successful Tenderer shall be returned as promptly as possible once the successful Tenderer has signed the Contract and furnished the required Performance Security, and any other documents required in the **TDS**.

19.7 The Tender Security may be forfeited or the Tender-Securing Declaration executed:

a) if a Tenderer withdraws its Tender during the period of Tender validity specified by the Tenderer on the Form of Tender, or any extension there to provided by the Tenderer; or

b) if the successful Tenderer fails to:

i) sign the Contract in accordance with ITT 47; or

ii) furnish a Performance Security and if required in the **TDS**, and any other documents required in the **TDS.**

19.8 Where tender securing declaration is executed, the Procuring Entity shall recommend to the PPRA that PPRA debars the Tenderer from participating in public procurement as provided in the law.

19.9 The Tender Security or the Tender-Securing Declaration of a JV shall be in the name of the JV that submits the Tender. If the JV has not been legally constituted into a legally enforceable JV at the time of tendering, the Tender Security or the Tender-Securing Declaration shall be in the names of all future members as named in the letter of intent referred to in ITT 4.1 and ITT 11.2.

19.10 A tenderer shall not issue a tender security to guarantee itself.

20. Format and Signing of Tender

20.1 The Tenderer shall prepare one original of the documents comprising the Tender as described in ITT 11 and clearly mark it "ORIGINAL." Alternative Tenders, if permitted in accordance with ITT 13, shall be clearly marked "ALTERNATIVE." In addition, the Tenderer shall submit copies of the Tender, in the number **specified in the TDS** and clearly mark them "COPY." In the event of any discrepancy between the original and the copies, the original shall prevail.

20.2 Tenderers shall mark as "CONFIDENTIAL" all information in their Tenders which is confidential to their business. This may include proprietary information, trade secrets, or commercial or financially sensitive information.

20.3 The original and all copies of the Tender shall be typed or written in indelible ink and shall be signed by a person duly authorized to sign on behalf of the Tenderer. This authorization shall consist of a written confirmation as specified in the **TDS** and shall be attached to the Tender. The name and position held by ach person signing the authorization must be typed or printed below the signature. All pages of the Tender where entries or amendments have been made shall be signed or initialed by the person signing the Tender.

20.4 In case the Tenderer is a JV, the Tender shall be signed by an authorized representative of the JV on behalf of the JV, and so as to be legally binding on all the members as evidenced by a power of attorney signed by their legally authorized representatives.

20.5 Any inter-lineation, erasures, or overwriting shall be valid only if they are signed or initialed by the person signing the Tender.

D. SUBMISSION AND OPENING OF TENDERS

21. Sealing and Marking of Tenders

21.1 The Tenderer shall deliver the Tender in a single sealed envelope, or in a single sealed package, or in a single sealed container bearing the name and Reference number of the Tender, addressed to the Procuring Entity and a warning not to open before the time and date for Tender opening date. Within the single envelope, package or container, the Tenderer shall place the following separate, sealed envelopes:

a) in an envelope or package or container marked "ORIGINAL", all documents comprising the Tender, as describedinITT11; and

b) in an envelope or package or container marked "COPIES" all required copies of the Tender; and

c) if alternative Tenders are permitted in accordance with ITT 13, and if relevant:

i) in an envelope or package or container marked "ORIGINAL - ALTERNATIVE TENDER", the alternative Tender; and

ii) in the envelope or package or container marked "COPIES-ALTERNATIVETENDER", all required copies of the alternative Tender.

The inner envelopes or packages or containers shall:

a) Bear the name and address of the Procuring Entity.
b) Bear the name and address of the Tenderer; and
c) Bear the name and Reference number of the Tender.

21.2 If an envelope or package or container is not sealed and marked as required, the *Procuring Entity* will assume no responsibility for the misplacement or premature opening of the Tender. Tenders that were misplaced or opened prematurely will not be accepted.

22. Deadline for Submission of Tenders

22.1 Tenders must be received by the Procuring Entity at the address specified in the **TDS** and no later than the date and time also specified in the **TDS.** When so specified in the **TDS**, Tenderers shall have the option of submitting their Tenders electronically. Tenderers submitting Tenders electronically shall follow the electronic Tender submission procedures specified in the **TDS**.

22.2 The Procuring Entity may, at its discretion, extend the deadline for the submission of Tenders by amending the Tender Documents in accordance with ITT 8, in which case all rights and obligations of the Procuring Entity and Tenderers previously subject to the deadline shall thereafter be subject to the deadline as extended.

23. Late Tenders

The Procuring Entity shall not consider any Tender that arrives after the deadline for submission of tenders, in accordance with ITT 22. Any Tender received by the Procuring Entity after the deadline for submission of Tenders shall be declared late, rejected, and returned unopened to the Tenderer.

24. Withdrawal, Substitution, and Modification of Tenders

24.1 A Tenderer may withdraw, substitute, or modify its Tender after it has been submitted by sending a written notice, duly signed by an authorized representative, and shall include a copy of the authorization in accordance with ITT 20.3, (except that withdrawal notices do not require copies). The corresponding substitution or modification of the Tender must accompany the respective written notice. All notices must be:

a) prepared and submitted in accordance with ITT 20 and ITT 21 (except that withdrawals notices do not require copies), and in addition, the respective envelopes shall be clearly marked "WITHDRAWAL," "SUBSTITUTION," "MODIFICATION; "and
b) received by the Procuring Entity prior to the deadline prescribed for submission of Tenders, in accordance with ITT 22.

24.2 Tenders requested to be withdrawn in accordance with ITT 24.1 shall be returned unopened to the Tenderers.

24.3 No Tender may be withdrawn, substituted, or modified in the interval between the deadline for submission of Tenders and the expiration of the period of Tender validity specified by the Tenderer on the Form of Tender or any extension thereof.

25. Tender Opening

25.1 Except in the cases specified in ITT 23 and ITT 24.2, the Procuring Entity shall publicly open and read out all Tenders received by the deadline, at the date, time and place specified **in the TDS**, in the presence of Tenderers' designated representatives and anyone who chooses to attend. Any specific electronic Tender opening procedures required if electronic Tendering is permitted in accordance with ITT 22.1, shall be as specified in the **TDS.**

25.2 First, envelopes marked "WITHDRAWAL" shall be opened and read out and the envelopes with the corresponding Tender shall not be opened but returned to the Tenderer. No Tender withdrawal shall be permitted unless the corresponding withdrawal notice contains a valid authorization to request the withdrawal and is read out attender opening.

25.3 Next, envelopes marked "SUBSTITUTION" shall be opened and read out and exchanged with the corresponding Tender being substituted, and the substituted Tender shall not be opened, but returned to the Tenderer. No Tender substitution shall be permitted unless the corresponding substitution notice contains a valid authorization to request the substitution and is read out at Tender opening.

25.4 Next, envelopes marked “MODIFICATION” shall be opened and read out with the corresponding Tender. No Tender modification shall be permitted unless the corresponding modification notice contains a valid authorization to request the modification and is read out at Tender opening.

25.5 Next, all remaining envelopes shall be opened on at time, reading out: the name of the Tenderer and whether there is a modification; the total Tender Price, per lot (contract) if applicable, including any discounts and alternative Tenders; the presence or absence of a Tender Security or Tender-Securing Declaration, if required; and any other details as the Procuring Entity may consider appropriate.

25.6 Only Tenders, alternative Tenders and discounts that are opened and read out at Tender opening shall be considered further for evaluation. The Form of Tender and pages of the Bill of Quantities (to be decided on by the tender opening committee) are to be initialed by the members of the tender opening committee attending the opening.

25.7 At the Tender Opening, the Procuring Entity shall neither discuss the merits of any Tender nor reject any Tender (except for late Tenders, in accordance with ITT 23.1).

25.8 The Procuring Entity shall prepare minutes of the Tender Opening that shall include, as a minimum:

a) The name of the Tenderer and whether there is a withdrawal, substitution, or modification;
b) The Tender Price, per lot (contract) if applicable, including any discounts;
c) Any alternative Tenders;
d) The presence or absence of a Tender Security, if one was required.
e) Number of pages of each tender document submitted.

25.9 The Tenderers' representatives who are present shall be requested to sign the minutes. The omission of a Tenderer's signature on the minutes shall not invalidate the contents and effect of the minutes. A copy of tender opening register shall be issued to a tenderer upon request.

E. Evaluation and Comparison of Tenders

26. Confidentiality

26.1 Information relating to the evaluation of Tenders and recommendation of contract award shall not be disclosed to Tenderers or any other persons not officially concerned with the Tender process until information on Intention to Award the Contract is transmitted to all Tenderers in accordance with ITT 43.

26.2 Any effort by a Tenderer to influence the Procuring Entity in the evaluation of the Tenders or Contract award decisions may result in the rejection of its tender.

26.3 Notwithstanding ITT 26.2, from the time of tender opening to the time of contract award, if a tenderer wishes to contact the Procuring Entity on any matter related to the tendering process, it shall do so in writing.

27. Clarification of Tenders

27.1 To assist in the examination, evaluation, and comparison of the tenders, and qualification of the tenderers, the Procuring Entity may, at its discretion, ask any tenderer for a clarification of its tender, given a reasonable time for a response. Any clarification submitted by a tenderer that is not in response to a request by the Procuring Entity shall not be considered. The Procuring Entity's request for clarification and the response shall be in writing. No change, including any voluntary increase or decrease, in the prices or substance of the tender shall be sought, offered, or permitted, except to confirm the correction of arithmetic errors discovered by the Procuring Entity in the evaluation of the tenders, in accordance with ITT 31.

27.2 If a tenderer does not provide clarifications of its tender by the date and time set in the Procuring Entity's request for clarification, its Tender may be rejected.

28. Deviations, Reservations, and Omissions

28.1 During the evaluation of tenders, the following definitions apply:

a) “Deviation” is a departure from the requirements specified in the tender document;

b) "Reservation" is the setting of limiting conditions or withholding from complete acceptance of the requirements specified in the tender document; and

c) "Omission" is the failure to submit part or all of the information or documentation required in the Tender document.

29. Determination of Responsiveness

29.1 The Procuring Entity's determination of a Tender's responsiveness is to be based on the contents of the tender itself, as defined in ITT 11.

29.2 A substantially responsive Tender is one that meets the requirements of the Tender document without material deviation, reservation, or omission. A material deviation, reservation, or omission is one that, if accepted, would:

a) Affect in any substantial way the scope, quality, or performance of the Works specified in the Contract; or

b) limit in any substantial way, inconsistent with the tender document, the Procuring Entity's rights or the tenderer's obligations under the proposed contract; or

c) if rectified, would unfairly affect the competitive position of other tenderers presenting substantially responsive tenders.

29.3 The Procuring Entity shall examine the technical aspects of the tender submitted in accordance with ITT 16, to confirm that all requirements of Section VII, Works' Requirements have been met without any material deviation, reservation or omission.

29.4 If a tender is not substantially responsive to the requirements of the tender document, it shall be rejected by the Procuring Entity and may not subsequently be made responsive by correction of the material deviation, reservation, or omission.

30. Non-material non-conformities

30.1 Provided that a tender is substantially responsive, the Procuring Entity may waive any non-conformities in the tender.

30.2 Provided that a Tender is substantially responsive, the Procuring Entity may request that the tenderer submit the necessary information or documentation, within a reasonable period of time, to rectify nonmaterial non-conformities in the tender related to documentation requirements. Requesting information or documentation on such non-conformities shall not be related to any aspect of the price of the tender. Failure of the tenderer to comply with the request may result in the rejection of its tender.

30.3 Provided that a tender is substantially responsive, the Procuring Entity shall rectify quantifiable nonmaterial non-conformities related to the Tender Price. To this effect, the Tender Price shall be adjusted, for comparison purposes only, to reflect the price of a missing or non-conforming item or component in the manner specified **in the TDS.**

31. Arithmetical Errors

31.1 The tender sum as submitted and read out during the tender opening shall be absolute and final and shall not be the subject of correction, adjustment or amendment in anyway by any person or entity.

31.2 Provided that the Tender is substantially responsive, the Procuring Entity shall handle errors on the following basis:

a) Any error detected if considered a major deviation that affects the substance of the tender, shall lead to disqualification of the tender as non-responsive.

b) Any errors in the submitted tender arising from a miscalculation of unit price, quantity, subtotal and total bid price shall be considered as a major deviation that affects the substance of the tender and shall lead to disqualification of the tender as non-responsive. and

c) If there is a discrepancy between words and figures, the amount in words shall prevail

31.3 Tenderers shall be notified of any error detected in their bid during the notification of award.

32. Conversion to Single Currency

For evaluation and comparison purposes, the currency (ies) of the Tender shall be converted into a single currency **as specified in the TDS**.

33. Margin of Preference and Reservations

33.1 A margin of preference may be allowed only when the contract is open to international competitive tendering where foreign contractors are expected to participate in the tendering process and where the contract exceeds the value/threshold specified in the Regulations.

33.2 A margin of preference shall not be allowed unless it is specified so in the **TDS**.

33.3 Contracts procured on basis of international competitive tendering shall not be subject to reservations exclusive to specific groups as provided in ITT 33.4.

33.4 Where it is intended to reserve a contract to a specific group of businesses (these groups are Small and Medium Enterprises, Women Enterprises, Youth Enterprises and Enterprises of persons living with disability, as the case may be), and who are appropriately registered as such by the authority to be specified in the **TDS**, a procuring entity shall ensure that the invitation to tender specifically indicates that only businesses or firms belonging to the specified group are eligible to tender. No tender shall be reserved to more than one group. If not so stated in the Invitation to Tender and in the Tender documents, the invitation to tender will be open to all interested tenderers.

34. Nominated Subcontractors

34.1 **Unless** otherwise stated **in the TDS,** the Procuring Entity does not intend to execute any specific elements of the Works by subcontractors selected/nominated by the Procuring Entity. In case the Procuring Entity nominates a subcontractor, the subcontract agreement shall be signed by the Subcontractor and the Procuring Entity. The main contract shall specify the working arrangements between the main contractor and the nominated subcontractor.

34.2 Tenderers may propose subcontracting up to the percentage of total value of contracts or the volume of works as specified **in the TDS**. Subcontractors proposed by the Tenderer shall be fully qualified for their parts of the Works.

34.3 Domestic subcontractor's qualifications shall not be used by the Tenderer to qualify for the Works unless their specialized parts of the Works were previously designated so by the Procuring Entity **in the TDS** as can be met by subcontractors referred to hereafter as 'Specialized Subcontractors', in which case, the qualifications of the Specialized Subcontractors proposed by the Tenderer may be added to the qualifications of the Tenderer.

35. Evaluation of Tenders

35.1 The Procuring Entity shall use the criteria and methodologies listed in this ITT and Section III, Evaluation and Qualification Criteria. No other evaluation criteria or methodologies shall be permitted. By applying the criteria and methodologies the Procuring Entity shall determine the Lowest Evaluated Tender in accordance with ITT 40.

35.2 To evaluate a Tender, the Procuring Entity shall consider the following:

a) Price adjustment in accordance with ITT 31.1(iii); excluding provisional sums and contingencies, if any, but including Day work items, where priced competitively;

b) Price adjustment due to discounts offered in accordance with ITT 14.4;

c) converting the amount resulting from applying (a) and (b) above, if relevant, to a single currency in accordance with ITT 32;

d) price adjustment due to quantifiable non material non-conformities in accordance with ITT 30.3; and

e) any additional evaluation factors specified **in the TDS** and Section III, Evaluation and Qualification Criteria.

35.3 The estimated effect of the price adjustment provisions of the Conditions of Contract, applied over the period of execution of the Contract, shall not be considered intender evaluation.

35.4 Where the tender involves multiple lots or contracts, the tenderer will be allowed to tender for one or more lots (contracts). Each lot or contract will be evaluated in accordance with ITT 35.2. The methodology to determine the lowest evaluated tenderer or tenderers based one lot (contract) or based on a combination of lots (contracts), will be specified in Section III, Evaluation and Qualification Criteria. In the case of multiple lots or contracts, tenderer will be will be required to prepare the Eligibility and Qualification Criteria Form for each Lot.

36. Comparison of Tenders

The Procuring Entity shall compare the evaluated costs of all substantially responsive Tenders established in accordance with ITT 35.2 to determine the Tender that has the lowest evaluated cost.

37. Abnormally Low Tenders and Abnormally High

Tenders Abnormally Low Tenders

37.1 An Abnormally Low Tender is one where the Tender price, in combination with other elements of the Tender, appears so low that it raises material concerns as to the capability of the Tenderer in regards to the Tenderer's ability to perform the Contract for the offered Tender Price or that genuine competition between Tenderers is compromised.

37.2 In the event of identification of a potentially Abnormally Low Tender, the Procuring Entity shall seek written clarifications from the Tenderer, including detailed price analyses of its Tender price in relation to the subject matter of the contract, scope, proposed methodology, schedule, allocation of risks and responsibilities and any other requirements of the Tender document.

37.3 After evaluation of the price analyses, in the event that the Procuring Entity determines that the Tenderer has failed to demonstrate its capability to perform the Contract for the offered Tender Price, the Procuring Entity shall reject the Tender.

Abnormally High Tenders

37.4 An abnormally high tender price is one where the tender price, in combination with other constituent elements of the Tender, appears unreasonably too high to the extent that the Procuring Entity is concerned that it (the Procuring Entity) may not be getting value for money or it may be paying too high a price for the contract compared with market prices or that genuine competition between Tenderers is compromised.

37.5 In case of an abnormally high price, the Procuring Entity shall make a survey of the market prices, check if the estimated cost of the contract is correct and review the Tender Documents to check if the specifications, scope of work and conditions of contract are contributory to the abnormally high tenders. The Procuring Entity may also seek written clarification from the tenderer on the reason for the high tender price. The Procuring Entity shall proceed as follows:

i) If the tender price is abnormally high based on wrong estimated cost of the contract, the Procuring Entity may accept or not accept the tender depending on the Procuring Entity's budget considerations.

ii) If specifications, scope of work and/or conditions of contract are contributory to the abnormally high tender prices, the Procuring Entity shall reject all tenders and may retender for the contract based on revised estimates, specifications, scope of work and conditions of contract, as the case may be.

37.6 If the Procuring Entity determines that the Tender Price is abnormally too high because genuine competition between tenderers is compromised (*often due to collusion, corruption or other manipulations*), the Procuring Entity shall reject all Tenders and shall institute or cause competent Government Agencies to institute an investigation on the cause of the compromise, before retendering.

38. Unbalanced and/or Front-Loaded Tenders

38.1 If in the Procuring Entity's opinion, the Tender that is evaluated as the lowest evaluated price is seriously unbalanced and/or front loaded, the Procuring Entity may require the Tenderer to provide written clarifications. Clarifications may include detailed price analyses to demonstrate the consistency of the tender prices with the scope of works, proposed methodology, schedule and any other requirements of the Tender document.

38.2 After the evaluation of the information and detailed price analyses presented by the Tenderer, the Procuring Entity may as appropriate:

a) accept the Tender; or

b) require that the total amount of the Performance Security be increased at the expense of the Tenderer to a level not exceeding a 10% of the Contract Price; or

c) agree on a payment mode that eliminates the inherent risk of the Procuring Entity paying too much for undelivered works; or

d) reject the Tender,

39. Qualifications of the Tenderer

39.1 The Procuring Entity shall determine to its satisfaction whether the eligible Tenderer that is selected as having submitted the lowest evaluated cost and substantially responsive Tender, meets the qualifying criteria specified in Section III, Evaluation and Qualification Criteria.

39.2 The determination shall be based upon an examination of the documentary evidence of the Tenderer's qualifications submitted by the Tenderer, pursuant to ITT 17. The determination shall not take into consideration the qualifications of other firms such as the Tenderer's subsidiaries, parent entities, affiliates, subcontractors (other than Specialized Subcontractors if permitted in the Tender document), or any other firm(s) different from the Tenderer.

39.3 An affirmative determination shall be a prerequisite for award of the Contract to the Tenderer. A negative determination shall result in disqualification of the Tender, in which event the Procuring Entity shall proceed to the Tenderer who offers a substantially responsive Tender with the next lowest evaluated price to make a similar determination of that Tenderer's qualifications to perform satisfactorily.

40. Lowest Evaluated Tender

Having compared the evaluated prices of Tenders, the Procuring Entity shall determine the Lowest Evaluated Tender. The Lowest Evaluated Tender is the Tender of the Tenderer that meets the Qualification Criteria and whose Tender has been determined to be:

a) Most responsive to the Tender document; and

b) The lowest evaluated price.

41. Procuring Entity's Right to Accept Any Tender, and to Reject Any or All Tenders.

The Procuring Entity reserves the right to accept or reject any Tender and to annul the Tender process and reject all Tenders at any time prior to Contract Award, without there by incurring any liability to Tenderers. In case of annulment, all Tenders submitted and specifically, Tender securities, shall be promptly returned to the Tenderers.

F. AWARD OF CONTRACT

42. Award Criteria

The Procuring Entity shall award the Contract to the successful tenderer whose tender has been determined to be the Lowest Evaluated Tender.

43. Notice of Intention to enter into a Contract

Upon award of the contract and Prior to the expiry of the Tender Validity Period the Procuring Entity shall issue a Notification of Intention to Enter into a Contract/Notification of award to all tenderers which shall contain, at a minimum, the following information:

a) the name and address of the Tenderer submitting the successful tender;

b) the Contract price of the successful tender;

c) a statement of the reason(s) the tender of the unsuccessful tenderer to whom the letter is addressed was unsuccessful, unless the price information in (c) above already reveals the reason;

d) the expiry date of the Standstill Period; and

e) instructions on how to request a debriefing and/or submit a complaint during the stand still period;

44. Stand still Period

42.1 The Contract shall not be signed earlier than the expiry of a Standstill Period of 14 days to allow any dissatisfied tender to launch a complaint. Where only one Tender is submitted, the Standstill Period shall not apply.

42.2 Where a Standstill Period applies, it shall commence when the Procuring Entity has transmitted to each Tenderer the Notification of Intention to Enter into a Contract with the successful Tenderer.

45. Debriefing by the Procuring Entity

45.1 On receipt of the Procuring Entity's Notification of Intention to Enter into a Contract referred to in ITT 43, an unsuccessful tenderer may make a concern regarding their tender. The Procuring Entity shall provide the debriefing within five days of receipt of the request.

45.2 Debriefings of unsuccessful Tenderers may be done in writing or verbally. The Tenderer shall bear its own costs of attending such a debriefing meeting.

46. Letter of Award

Prior to the expiry of the Tender Validity Period and upon expiry of the Standstill Period specified in ITT 42.1, upon addressing a complaint that has been filed within the Standstill Period, the Procuring Entity shall transmit the Letter of Award to the successful Tenderer. The letter of award shall request the successful tenderer to furnish the Performance Security within 21 days of the date of the letter.

47. Signing of Contract

47.1 Upon the expiry of the fourteen days of the Notification of Intention to enter into contract and upon the parties meeting their respective statutory requirements, the Procuring Entity shall send the successful Tenderer the Contract Agreement.

47.2 Within fourteen (14) days of receipt of the Contract Agreement, the successful Tenderer shall sign, date, and return it to the Procuring Entity.

47.3 The written contract shall be entered into within the period specified in the notification of award and before expiry of the tender validity period.

48. Performance Security

48.1 Within twenty-one (21) days of the receipt of the Letter of Award from the Procuring Entity, the successful Tenderer shall furnish the Performance Security and, any other documents required in the **TDS**, in accordance with the General Conditions of Contract, subject to ITT 38.2 (b), using the Performance Security and other Forms included in Section X, Contract Forms, or another form acceptable to the Procuring Entity. A foreign institution providing a bank guarantee shall have a correspondent financial institution located in Kenya, unless the Procuring Entity has agreed in writing that a correspondent bank is not required.

48.2 Failure of the successful Tenderer to submit the above-mentioned Performance Security and other documents required in the **TDS** or sign the Contract shall constitute sufficient grounds for the annulment of the award and forfeiture of the Tender Security. In that event the Procuring Entity may award the Contract to the Tenderer offering the next Best Evaluated Tender.

48.3 Performance security shall not be required for contract estimated to cost less than the amount specified in the Regulations.

49. Publication of Procurement Contract

Within fourteen days after signing the contract, the Procuring Entity shall publish the awarded contract at its notice boards and websites; and on the Website of the Authority. At the minimum, the notice shall contain the following information:

a) name and address of the Procuring Entity;

b) name and reference number of the contract being awarded, a summary of its scope and the selection method used;
c) the name of the successful Tenderer, the final total contract price, the contract duration.
d) dates of signature, commencement and completion of contract;
e) names of all Tenderers that submitted Tenders, and their Tender prices as read out at Tender opening.

50. Procurement Related Complaint and Administrative Review

50.1 The procedures for making Procurement-related Complaints shall be specified in the **TDS.**

50.2 A request for administrative review shall be made in the form provided under contract forms.

Section II - Tender Data Sheet (TDS)

The following specific data shall complement, supplement, or amend the provisions in the Instructions to Tenderers (ITT). Whenever there is a conflict, the provisions herein shall prevail over those in ITT.

Reference to ITC Clause	PARTICULARS OF APPENDIX TO INSTRUCTIONS TO TENDERS
A. General	
ITT 1.1	The name of the contract is **PROPOSED GRADING AND CONSTRUCTION OF A DRIFT AT THUNGUTHU RIVER NGUNI-KALWA ROAD-AT MWINGI NORTH, NGOMENI WARD** The reference number of the Contract is **CGOKTI/EQF/FRMA/001/2024-2025**
ITT 2.4	The Information made available on competing firms is as follows'**N/A**
ITT 2.4	The firms that provided consulting services for the contract being tendered for are: **N/A**
ITT 3.1	Maximum number of members in the Joint Venture (JV) shall be: **N/A**
B. Contents of Tender Document	
ITT 7.1	(i) The Tenderer will submit any request for clarifications in writing at the Address **Ag. HEAD OF SUPPLY CHAIN MANAGEMENT SERVICES** **PO BOX 33-90200** **KITUI** EMAIL: **procurement@kitui.go.ke** **TO REACH THE ENTITY NOT LATER THAN 3 DAYS BEFORE CLOSING** (ii) The Procuring Entity Will publish its response at the website www.kitui.go.ke and PPIP portal www.tenders.go.ke
ITT 7.2	(A) A pre-arranged pretender site visit ***"shall"*** take place at **10:00 am** on ***Wednesday, 30th April,2025.*** Interested bidders to contact sub-county Roads office (B) Pre-Tender meeting *[insert "shall" or "shall not]* take place at the following date, time and place: **N/A**
ITT 7.3	The Tenderer will submit any questions in writing, to reach the Procuring Entity not later than 7 days before the meeting. **N/A**
ITT 7.5	The Procuring Entity's website where Minutes of the pre-Tender meeting and the pre-arranged pretender will be published is **N/A**
C. Preparation of Tenders	
ITT 11.1 (h)	The Tenderer shall submit the following additional documents in its Tender: **a) copy of Certificate of Incorporation;** **b) copy of Registration with NCA8 and above for Road works;** **c) copy of Valid NCA Contractors Annual practicing license;** **d) copy of KRA Valid Tax Compliance Certificate;** **e) copy of KRA VAT and PIN Registration Certificate;** **f) copy of most recent CR12, valid for immediate previous 12 months;**

Reference to ITC Clause	PARTICULARS OF APPENDIX TO INSTRUCTIONS TO TENDERS
	g) Experience in works of a similar nature and size for each of the last five years; **h) Equipment holding supported by relevant documentation;** **i) Current Trading License and principal place of Business;** **j) Proof of having Bank Account in the Tenderer's name;** **k) Duly filled confidential Business Questionnaire;** **l) filled and Signed Form of Tender and Appendix;** **m) Duly filled Bills of Quantities;** **n) Well serialized pages by the bidder.** *o)* **site visit certificate**
ITT 13.1	Alternative Tenders **SHALL NOT BE** considered.
ITT 13.2	Alternative times for completion **SHALL** be Permitted upon request
ITT 13.4	Alternative technical solutions shall be permitted for the following parts of the Works: **N/A**
ITT 14.5	The prices quoted by the Tenderer shall be: **Kenya Shillings.**
ITT 15.2(a)	Foreign currency requirements **Not allowed.**
ITT 18.2	The Tender validity period shall be **140 Days**
ITT 18.3	a) The Number of days beyond the expiry of the initial tender validity period will be **30 Days**. (b) The Tender price shall be adjusted by the following percentages of the tender price: **N/A** (i) By _____% of *the local currency portion of the Contract price adjusted to reflect local inflation during the period of extension,* *and* **N/A** *(ii) By_____% the foreign currency portion of the Contract price adjusted to reflect the international inflation during the period of extension.* **N/A**
ITT 19.1	A Tender Security **SHALL BE** required. If a Tender Security shall be required, the amount and currency of the Tender Security shall Be **Ksh 130,00.00**
ITT 19.5	Other documents required are: The winning Bidder shall be required to provide Performance Bank Guarantee of 10% of Tender sum **(Before contract signing if bid successful).**
ITT 20.1	In addition to the original of the Tender, the number of copies is: **One (1) copy**
ITT 20.3	The written confirmation of authorization to sign on behalf of the Tenderer shall consist of: **Form of Power of Attorney Commissioned by Commissioner of Oaths**
D. Submission and Opening of Tenders	
ITT 21.2	A tender package or container that cannot fit in the tender box shall be received at the **Ag. Head of Supply Chain Management Services office**
ITT 22.1	(A) For Tender submission purposes shall only be done **Manually (Hand delivery of post) in a sealed envelope** **(4)** Date and time for submission of Tenders **Friday, 9th May,2025** at **12.00 Noon.**
ITT 25.1	The Tender opening shall take place at the time and the address for Opening of Tenders provided below:

Reference to ITC Clause	PARTICULARS OF APPENDIX TO INSTRUCTIONS TO TENDERS
	Name of Procuring Entity: **COUNTY GOVERNMENT OF KITUI** **COUNTY MINISTRY OF FINANCE, ECONOMIC PLANNING AND REVENUE MANAGEMENT BOADROOM** (1) State date and time of tender opening. **Friday 9th May,2025** at **12.00 Noon**
ITT 25.1	If Tenderers are allowed to submit Tenders electronically, they shall follow the electronic tender submission procedures **N/A**
E. Evaluation, and Comparison of Tenders	
ITT 30.3	The adjustment shall be based on the ____*average*_____ *[insert "average" or "highest"]* price of the item or component as quoted in other substantially responsive Tenders. If the price of the item or component cannot be derived from the price of other substantially responsive Tenders, the Procuring Entity shall use its Lowest estimate. **N/A**
ITT 31.2	The error shall be considered a major deviation that leads to disqualification of the tender if the percentage of the error (error over the tender price quoted) is: **more than_____% or less than _____ %. N/A**
ITT 32.1	The currency that shall be used for Tender evaluation and comparison purposes to convert at the selling exchange rate all Tender prices expressed in various currencies into a single currency is: **Kshs.** The source of exchange rate shall be: **The Central bank of Kenya** The date for the exchange rate shall be*:* **the deadline date for Submission of the Tenders.** *For comparison of Tenders, the Tender Price, corrected pursuant to ITT 31, shall first be broken down into the respective amounts payable in various currencies by using the selling exchange rates specified by the Tenderer in accordance with ITT 15.1.* *In the second step, the Procuring Entity will convert the amounts in various currencies in which the Tender Price is payable (excluding Provisional Sums but including Daywork where priced competitively) to the single currency identified above at the selling rates established for similar transactions by the authority specified and, on the date, stipulated above.*
ITT 33.2	A margin of preference **SHALL NOT** apply.
ITT 33.4	The invitation to tender is extended to the following groups that qualify for Reservations **N/A**
ITT 34.1	At this time, the Procuring Entity **does not intend** to execute certain specific parts of the Works by subcontractors selected in advance.

Reference to ITC Clause	PARTICULARS OF APPENDIX TO INSTRUCTIONS TO TENDERS
ITT 34.2	Contractor's may propose subcontracting: Maximum percentage of subcontracting permitted is: _____*% of the total contract amount.* Tenderers planning to subcontract more than 10% of total volume of work shall specify, in the Form of Tender, the activity (ies) or parts of the Works to be subcontracted along with complete details of the subcontractors and their qualification and experience. **N/A**
ITT 34.3	*[Indicate N/A if not applicable]* The parts of the Works for which the Procuring Entity permits Tenderers to propose Specialized Subcontractors are designated as follows: For the above-designated parts of the Works that may require Specialized Subcontractors, the relevant qualifications of the proposed Specialized Subcontractors will be added to the qualifications of the Tenderer for the purpose of evaluation. **N/A**
ITT 35.2 (e)	Additional requirements apply. These are detailed in the evaluation criteria in Section III, Evaluation and Qualification Criteria.
ITT 48.2	Additional requirements are: These are detailed in the evaluation criteria in Section III, Evaluation and Qualification Criteria.
ITT 50.1	The procedures for making a Procurement-related Complaint are available from the PPRA website info@ppra.go.ke or complaints@ppra.go.ke. If a Tenderer wishes to make a Procurement-related Complaint, the Tenderer should submit its complaint following these procedures, in writing (by the quickest means available, that is either by hand delivery or email to: For the attention: **Ag. Head of Supply Chain Management Services** Procuring Entity: **County Government of Kitui** **County Ministry of Roads, Public Works and Transport** Email address*: procurement@kitui.go.ke* In summary, a Procurement-related Complaint may challenge any of the following: (i) the terms of the Tender Documents; and (ii) the Procuring Entity's decision to award the contract.

SECTION III- EVALUATION AND QUALIFICATION CRITERIA

General Provisions

1. General Provisions

1.1 This section contains the criteria that the Employer shall use to evaluate tender and qualify tenderers. No other factors, methods or criteria shall be used other than specified in this tender document. The Tenderer shall provide all the information requested in the forms included in Section IV, Tendering Forms. The Procuring Entity shall use **the Standard Tender Evaluation Document for Goods and Works** for evaluating Tenders.

1.2 Wherever a Tenderer is required to state a monetary amount, Tenderers should indicate the Kenya Shilling equivalent using the rate of exchange determined as follows:

a) For construction turnover or financial data required for each year - Exchange rate prevailing on the last day of the respective calendar year (in which the amounts for that year are to be converted) was originally established.

b) Value of single contract - Exchange rate prevailing on the date of the contract signature.

c) Exchange rates shall be taken from the publicly available source identified in the ITT 14.3. Any error in determining the exchange rates in the Tender may be corrected by the Procuring Entity.

1.3 Evaluation and contract award Criteria

The Procuring Entity shall use the criteria and methodologies listed in this Section to evaluate tenders and arrive at the Lowest Evaluated Tender. The tender that (i) meets the qualification criteria, (ii) has been determined to be substantially responsive to the Tender Documents, and (iii) is determined to have the Lowest Evaluated Tender price shall be selected for award of contract.

2. Preliminary examination for Determination of Responsiveness

The Procuring Entity will start by examining all tenders to ensure they meet in all respects the eligibility criteria and other requirements in the ITT, and that the tender is complete in all aspects in meeting the requirements of *"Part 2 – Procuring Entity's Works Requirements",* including checking for tenders with unacceptable errors, abnormally low tenders, abnormally high tenders and tenders that are front loaded. The Standard Tender Evaluation Report for Goods and Works for evaluating Tenders provides clear guidelines on how to deal with review of these requirements. Tenders that do not pass the Preliminary Examination will be considered irresponsive and will not be considered further.

A. Preliminary Evaluation Requirements

NO.	MANDATORY REQUIREMENTS	Responsive or Not responsive (Yes/No)
1.	Must attach a Copy of certificate of Registration/Incorporation	
2.	Must attach CR12 for Limited Companies & Partnership deed for Partnerships and Copies of ID Cards of the Directors not More Than 12 Months from the Date of this Advert	
3.	Must attach a valid Business Permit/License (obtained from County Government)	
4.	Must attach a Copy of Current Valid Tax Compliance Certificate issued by the Kenya Revenue Authority	
5.	Valid NCA Certificate category 8 and above (Road Works)	
6.	Current NCA practicing license	
7.	Must submit Tender Form duly Completed, Signed and Stamped by The Tenderer in the format provided.	

8.	Must submit Priced Bills of Quantities duly Completed, Signed and Stamped by the Tenderer in the format provided	
9.	Must submit a dully filled, signed and stamped Confidential Business Questionnaire in format provided	
10.	Must fully Fill, sign and stamp certificate of independent tender determination in the format provided	
11.	Must fully Fill, sign and stamp Self declaration forms **SD 1: -** self-declaration that the person / Tenderer is not debarred in the matter of the Public Procurement and Asset disposal Act,2015	
12.	Must fully Fill, sign and stamp Self declaration forms **SD 2**: - self-declaration that the person / Tenderer will not engage on any corrupt of fraudulent practice	
13.	Must fully Fill, sign and stamp PPRA eligibility, conflict of interest, and the declaration and commitment to the code of ethics form that they will not engage in any corrupt or fraudulent practice format provided	
14.	Must fully Fill, sign and stamp the Supplier Details Form in the Format Provided	
15.	All pages of the tender documents including the attachments must be dully paginated Sequentially in a continuous ascending order from the first page to the last page.	
16.	Must submit one original copy of the Tender Document and one copy. Submission of Original and Copy (all Volumes) in the format required by the procuring entity and all the tender document (all volumes) to be **TAPE BOUND**	
17.	Must submit a properly tape-bound document **(use of spring bound and spring files will lead to automatic disqualification),**	
18.	Dully filled, signed and stamped Site Visit Form	
19	Tenders must be accompanied by a Tender Security of Ksh. 130,000 (One hundred and Thirty Thousand shillings only)from a reputable financial institution	

B. Technical Evaluation (MINIMUM PASS MARKS WILL BE 70 MARKS)

	Requirement	Criteria	Max Score	Scores
1.	**Past Related Works** Past Related Works Experience Successful completion as a prime contractor or subcontractor in the execution of at least three **(3)** road maintenance projects of a similar nature and comparable in complexity to the proposed contract within the last five (5) years.	(i) **Provide 3 Projects of similar works and magnitude** (Attach completion certificates, Local Service Orders, Contract Agreement & Award letters for each project named) Each set - **10 marks** (ii) works of similar nature **but** of smaller magnitude, each set- **5 marks** (iii) No evidence of similar works & no attachment of the documents – **0 marks**	**30**	
2	**Equipment Capabilities.** The Applicant list down, the plants and equipment that are in his ownership and the ones proposed for hire which should be suitable for executing the works. – Applicants must attach evidence of ownership arrangements. **Notes** •If the equipment is owned, must provide CLEAR copies of logbook or proof of ownership. •If equipment is hired or leased Provide a commitment letter from the lessor of the equipment addressed to the Chief Officer – County Ministry of Roads and Public works indicating that the lessor shall avail the equipment upon award of the tender and submit a copy of a written agreement to lease between lessee and lessor indicating list of equipment and their corresponding copies of log books or proof of ownership by lessor; or if from the National Ministry of Infrastructure the commitment letter without logbook will be sufficient. •The equipment listed shall be available on site when required	i. Excavator/Wheel loader/backhoe - **5 marks** ii. Concrete mixer – **2 marks** iii. Poker vibrator – **2 marks** iv. 2 No. Tipper (each with capacity of 18 tons) - **6 Marks**	**20**	
3	Financial capacity	i. Last 3 years Audited accounts All pages must be initialed and stamped	**15**	

		by both a practicing Auditor registered with ICPAK and one of the Directors. Auditor's practicing membership number from ICPAK must be indicated and a valid practicing license shall be provided. **(7 Marks) (2022,2023,2024)** ii. Minimum average annual construction turnover of Kenya Shillings **[10,000,000],** equivalent calculated as total certified payments received for contracts in progress and/or completed within the last **3 years, divided by 3 years (5 Marks)** iii. Attach evidence in form of letter from bank, overdraft facility, current bank statements for the last 6 months **(3 Marks**)		
	Contractor's Representative and Key Personnel	Curriculum Vitae (CVs) of the Proposed Key Staff must be presented in the provided format and duly signed by the proposed individual. Copies of certificates and Annual Practicing Licenses (for Engineers) and Academic Certificates for all staff is mandatory;	**20**	

Site Agent Max 15 Marks) **Must be a Kenyan citizen (0 marks if requirement is not met)**	Registration	Registered Engineer by EBK (Civil Engineer)	**5 marks**
		Not Registered	**0 marks**
	Qualification Civil Engineering or equivalent	Degree)	**5 marks**
		Diploma	**3 marks**
		Other qualification	**1 mark**
	Experience	Above 4 years	**5 marks**
		Less than 4 years	**3 marks**
Surveyor **(Max 5 Marks)**	Qualification	Degree	**3 Marks**
		Diploma	**2 marks**
		Others	**1 mark**
	Experience	Above 4 years	**2 marks**
		Less than 4 years	**1 mark**

4	Proposed methodology	Tenderer to provide a proposed Program of Works/Work Schedule with cashflow estimates, Equipment schedule and quality control detailing each activity and how it will be executed within the contract period. Present the work schedule in a gantt chart.	**15**	

C. FINANCIAL EVALUATION;

The bids which have been deemed technically responsive shall be ranked from the lowest to the highest and awarded to the **lowest evaluated bidder.**

3. Tender Evaluation (ITT 35)

Price evaluation: In addition to the criteria listed in ITT 35.2 (a) – (d) the following criteria shall apply:

i) **Alternative Completion Times,** if permitted under ITT 13.2, will be evaluated as follows: N/A

ii) **Alternative Technical Solutions** for specified parts of the Works, if permitted under ITT 13.4, will be evaluated as follows N/A

iii) **Other Criteria; i**f permitted under ITT 35.2(d): N/A

4. Multiple Contracts

4.1 Multiple contracts will be permitted in accordance with ITT 35.4. Tenderers are evaluated on basis of Lots and the lowest evaluated tenderer identified for each Lot. The Procuring Entity will select one Option of the two Options listed below for award of Contracts.

OPTION 1

i) If a tenderer wins only one Lot, the tenderer will be awarded a contract for that Lot, provided the tenderer meets the Eligibility and Qualification Criteria for that Lot.

ii) If a tenderer wins more than one Lot, the tender will be awarded contracts for all won Lots, provided the tenderer meets the aggregate Eligibility and Qualification Criteria for all the Lots. The tenderer will beawarded the combination of Lots for which the tenderer qualifies and the others will be considered for award to second lowest the tenderers.

OPTION 2

The Procuring Entity will consider all possible combinations of won Lots [contract(s)] and determine the combinations with the lowest evaluated price. Tenders will then be awarded to the Tenderer or Tenderers in the combinations provided the tenderer meets the aggregate Eligibility and Qualification Criteria for all the won Lots.

5. Alternative Tenders (ITT 13.1)

An alternative if permitted under ITT 13.1, will be evaluated as follows:

The Procuring Entity shall consider Tenders offered for alternatives as specified in Part2-Works Requirements. Only the technical alternatives, if any, of the Tenderer with the Best Evaluated Tender conforming to the basic technical requirements shall be considered by the Procuring

6. MARGIN OF PREFERENCE N/A

6.1 If the TDS so specifies, the Procuring Entity will grant a margin of preference of fifteen percent (15%) to be loaded one valuated price of the foreign tenderers, where the percentage of shareholding of Kenyan citizens is less than fifty-one percent (51%).

6.2 Contractors applying for such preference shall be asked to provide, as part of the data for qualification, such information, including details of ownership, as shall be required to determine whether, according to the classification established by the Procuring Entity, a particular contract or or group of contractors qualifies for a margin of preference.

6.3 After Tenders have been received and reviewed by the Procuring Entity, responsive Tenders shall be assessed to ascertain their percentage of shareholding of Kenyan citizens. Responsive tenders to shall be classified into the following groups:

i) Group A: tenders offered by Kenyan Contractors and other Tenderers where Kenyan citizens hold shares of over fifty one percent (51%).

ii) Group B: tenders offered by foreign Contractors and other Tenderers where Kenyan citizens hold shares of less than fifty one percent (51%).

64 All evaluated tenders in each group shall, as a first evaluation step, be compared to determine the lowest tender, and the lowest evaluated tender in each group shall be further compared with each other. If, as a result of this comparison, a tender from Group A is the lowest, it shall be selected for the award. If a tender from Group B is the lowest, an amount equal to the percentage indicated in Item 3.1 of the respective tender price, including unconditional discounts and excluding provisional sums and the cost of day works, if any, shall be added to the evaluated price offered in each tender from Group B. All tenders shall then be compared using new prices with added prices to Group Band the lowest evaluated tender from Group A. If the tender from Group A is still the lowest tender, it shall be selected for award. If not, the lowest evaluated tender from Group B based on the first evaluation price shall be selected.

7. Post qualification and Contract award (ITT 39), more specifically,

a) In case the tender was subject to post-qualification, the contract shall be awarded to the lowest evaluated tenderer, subject to confirmation of pre-qualification data, if so required.

b) In case the tender was not subject to post-qualification, the tender that has been determined to be the lowest evaluated tenderer shall be considered for contract award, subject to meeting each of the following conditions.

i) The Tenderer shall demonstrate that it has access to, or has available, liquid assets, unencumbered real assets, lines of credit, and other financial means (independent of any contractual advance payment) sufficient to meet the construction cash flow of Kenya Shillings **(Equivalent to EE/Budget).**

ii) Minimum average annual construction turnover of Kenya Shillings **(Equivalent to EE/Budget).** equivalent calculated as total certified payments received for contracts in progress and/or completed within the last **2 Years**.

iii) At least **2** of contract(s) of a similar nature executed within Kenya, or the East African Community or abroad, that have been satisfactorily and substantially completed as a prime contractor, or joint venture member or sub-contractor each of minimum value Kenya shillings
(Equivalent to EE/Budget) equivalent.

iv) Contractor's Representative and Key Personnel, which are specified as detailed in the Qualification from summary below

v) Contractors key equipment listed on the table "Contractor's Equipment" below and more specifically listed as *[specify requirements for each lot as applicable]* "Contractor's Equipment" below.

vi) Other conditions depending on their seriousness.

a) **History of non-performing contracts**:
Tenderer and each member of JV incase the Tenderer is a JV, shall demonstrate that Non-performance of a contract did not occur because of the default of the Tenderer, or the member of a JV in the last 3 Years. The required information shall be furnished in the appropriate form.

b) Pending Litigation
Financial position and prospective long-term profitability of the Single Tenderer, and in the case the Tenderer is a JV, of each member of the JV, shall remain sound according to criteria established with respect to Financial Capability under Paragraph (i) above if all pending litigation will be resolved against the Tenderer. Tenderer shall provide information on pending litigations in the appropriate form.

c) Litigation History
There shall be no consistent history of court/arbitral award decisions against the Tenderer, in the last **Three Years (3)**. All parties to the contract shall furnish the information in the appropriate form about any litigation or arbitration resulting from contracts completed or ongoing under its execution over the years specified. A consistent history of awards against the Tenderer or any member of a JV may result in rejection of the tender.

SECTION IV - TENDERING FORMS

QUALIFICATION FORMS

1. FOREIGN TENDERERS 40%RULE.
2. TENDERER'S ELIGIBILITY- CONFIDENTIAL BUSINESS QUESTIONNAIRE
3. Form EQU: EQUIPMENT.
4. FORM PER -1.
5. FORM PER-2.
6. TENDERERS QUALIFICATION WITHOUT PRE-QUALIFICATION.
   - 6.1 FORM ELI-1.1.
   - 6.2 FORM ELI-1.2.
   - 6.3 FORM CON –2.
   - 6.4 FORM FIN –3.1.
   - 6.5 FORM FIN –3.2.
   - 6.6 FORM FIN –3.3.
   - 6.7 FORM FIN –3.4.
   - 6.8 FORM EXP -4.1.
   - 6.9 FORM EXP - 4.2(a).
   - 6.9 FORM EXP - 4.2 (a) (cont.).
   - 6.10 FORM EXP -4.2 (b).

OTHER FORMS

7. FORM OFTENDER.
8. FORM OF TENDER SECURITY - DEMAND BANKGUARANTEE.
9. FORM OF TENDER SECURITY (TENDERBOND).
10. FORM OF TENDER-SECURINGDECLARATION
11. FORM OF SITE VISIT
12. APPENDIX TO TENDER.

TECHNICAL PROPOSAL FORMS

Site Organization.

Method Statement.

Mobilization Schedule.

Construction Schedule.

QUALIFICATION FORMS

1. FOREIGN TENDERERS 40% RULE

Pursuant to ITT 3.9, a foreign tenderer must complete this form to demonstrate that the tender fulfils this condition.

ITEM	Description of Work Item	Describe location of Source	COST in K. shillings	Comments, if any
A	**Local Labor**			
1				
2				
3				
4				
5				
B	**Sub contracts from Local sources**			
1				
2				
3				
4				
5				
C	**Local materials**			
1				
2				
3				
4				
5				
D	**Use of Local Plant and Equipment**			
1				
2				
3				
4				
5				
E	Add any other items			
1				
2				
3				
4				
5				
6				
	TOTAL COST LOCAL CONTENT			
	PERCENTAGE OF CONTRACT PRICE			

3. FORM EQU: EQUIPMENT

The Tenderer shall provide adequate information to demonstrate clearly that it has the capability to meet the requirements for the key equipment listed in Section III, Evaluation and Qualification Criteria. A separate Form shall be prepared for each item of equipment listed, or for alternative equipment proposed by the Tenderer.

Item of equipment		
Equipment information	Name of manufacturer	Model and power rating
	Capacity	Year of manufacture
Current status	Current location	
	Details of current commitments	
Source	Indicate source of the equipment ☐ Owned ☐ Rented ☐ Leased ☐ Specially manufactured	

Omit the following information for equipment owned by the Tenderer.

Owner	Name of owner	
	Address of owner	
	Telephone	Contact name and title
	Fax	Telex
Agreements	Details of rental / lease / manufacture agreements specific to the project	

4. FORMPER-1

Contractor's Representative and Key Personnel Schedule

Tenderers should provide the names and details of the suitably qualified Contractor's Representative and Key Personnel to perform the Contract. The data on their experience should be supplied using the Form PER-2 below for each candidate.

Contractor' Representative and Key Personnel.

1.	**Title of position:** Contractor's Representative	
	Name of candidate:	
	Duration of appointment:	[*insert the whole period (start and end dates) for which this position will be engaged*]
	Time commitment: for this position:	[*insert the number of days/week/months/ that has been scheduled for this position*]
	Expected time schedule for this position:	[*insert the expected time schedule for this position (e.g. attach high level Gantt chart*]
2.	**Title of position:** *[_____]*	
	Name of candidate:	
	Duration of appointment:	[*insert the whole period (start and end dates) for which this position will be engaged*]
	Time commitment: for this position:	[*insert the number of days/week/months/ that has been scheduled for this position*]
	Expected time schedule for this position:	[*insert the expected time schedule for this position (e.g. attach high level Gantt chart*]
3.	**Title of position:** *[_____]*	
	Name of candidate:	
	Duration of appointment:	[*insert the whole period (start and end dates) for which this position will be engaged*]
	Time commitment: for this position:	[*insert the number of days/week/months/ that has been scheduled for this position*]
	Expected time schedule for this position:	[*insert the expected time schedule for this position (e.g. attach high level Gantt chart*]
4.	**Title of position:** *[_____]*	
	Name of candidate:	
	Duration of appointment:	[*insert the whole period (start and end dates) for which this position will be engaged*]
	Time commitment: for this position:	[*insert the number of days/week/months/ that has been scheduled for this position*]
	Expected time schedule for this position:	[*insert the expected time schedule for this position (e.g. attach high level Gantt chart*]
5.	**Title of position:** *[insert title]*	
	Name of candidate	
	Duration of appointment:	[*insert the whole period (start and end dates) for which this position will be engaged*]

	Time commitment: for this position:	[*insert the number of days/week/months/ that has been scheduled for this position*]
	Expected time schedule for this position:	[*insert the expected time schedule for this position (e.g. attach high level Gantt chart*]

5. FORM PER-2:

Resume and Declaration - Contractor's Representative and Key Personnel

Name of Tenderer

Position [*#1*]: [*title of position from Form PER-1*]		
Personnel information	Name:	Date of birth:
	Address:	E-mail:
	Professional qualifications:	
	Academic qualifications:	
	Language proficiency: *[language and levels of speaking, reading and writing skills]*	
Details		
	Address of Procuring Entity:	
	Telephone:	Contact (manager / personnel officer):
	Fax:	
	Job title:	Years with present Procuring Entity:

Summarize professional experience in reverse chronological order. Indicate particular technical and managerial experience relevant to the project.

Project	**Role**	**Duration of involvement**	**Relevant experience**
[main project details]	***[role and responsibilities on the project]***	***[time in role]***	***[describe the experience relevant to this position]***

DECLARATION

I, the under signed *[insert either "Contractor's Representative" or "Key Personnel" as applicable]*, certify that to the Lowest of my knowledge and belief, the information contained in this Form PER-2 correctly describes myself, my qualifications and my experience.

I confirm that I am available as certified in the following table and throughout the expected time schedule for this position as provided in the Tender:

Commitment	**Details**
Commitment to duration of contract:	*[insert period (start and end dates) for which this Contractor's Representative or Key Personnel is available to work on this contract]*
Time commitment:	*[insert period (start and end dates) for which this Contractor's Representative or Key Personnel is available to work on this contract]*

I understand that any misrepresentation or omission in this Form may:

a) be taken into consideration during Tende revaluation;
b) result in my disqualification from participating in the Tender;
c) result in my dismissal from the contract.

Name of Contractor's Representative or Key Personnel: [*insert name*]

Signature:_____

Date: (day month year): _____

Countersignature of authorized representative of the Tenderer:

Signature:_____

Date: (day month year): _____

6. TENDERERS QUALIFICATION WITHOUT PRE-QUALIFICATION

To establish its qualifications to perform the contract in accordance with Section III, Evaluation and Qualification Criteria the Tenderer shall provide the information requested in the corresponding Information Sheets included hereunder.

6.1 FORM ELI-

1.1 Tenderer Information

Form

Date:_____

ITT No. and title:_____

Tenderer's name
In case of Joint Venture (JV), name of each member:
Tenderer's actual or intended country of registration: *[icate country of Constitution]*
Tenderer's actual or intended year of incorporation:
Tenderer's legal address [in country of registration]:
Tenderer's authorized representative information Name: _____ Address: _____ Telephone/Fax numbers: _____ E-mail address: _____
1. Attached are copies of original documents of ☐ Articles of Incorporation (or equivalent documents of constitution or association), and/or documents of registration of the legal entity named above, in accordance with ITT 3.6 ☐ In case of JV, letter of intent to form JV or JV agreement, in accordance with ITT 3.5 ☐ In case of state-owned enterprise or institution, in accordance with ITT 3.8, documents establishing: • Legal and financial autonomy • Operation under commercial law • Establishing that the Tenderer is not under the supervision of the Procuring Entity 2. Included are the organizational chart and a list of Board of Directors

62 FORM ELI-1.2

Tenderer's JV Information Form
(To be completed for each member of Tenderer's JV)

Date:_____

ITT No. and title:_____

Tenderer's JV name:
JV member's name:
JV member's country of registration:
JV member's year of constitution:
JV member's legal address in country of constitution:
JV member's authorized representative information Name: _____ Address: _____ Telephone/Fax numbers: _____ E-mail address: _____
1. Attached are copies of original documents of ☐ Articles of Incorporation (or equivalent documents of constitution or association), and/or registration documents of the legal entity named above, in accordance with ITT 43.6. ☐ In case of a state-owned enterprise or institution, documents establishing legal and financial autonomy, operation in accordance with commercial law, and that they are not under the supervision of the Procuring Entity, in accordance with ITT 3.8. 2. Included are the organizational chart and a list of Board of Directors

63 FORM CON – 2

Historical Contract Non-Performance, Pending Litigation and Litigation History

Tenderer's Name:_____

Date:_____

JV Member's Name_____

ITT No. and title:_____

Non-Performed Contracts in accordance with Section III, Evaluation and Qualification Criteria			
☐ Contract non-performance did not occur since 1st January *[insert year]* specified in Section III, Evaluation and Qualification Criteria, Sub-Factor 2.1. ☐ Contract(s) not performed since 1st January *[insert year]* specified in Section III, Evaluation and Qualification Criteria, requirement 2.1			
Year	**Non- performed portion of contract**	**Contract Identification**	**Total Contract Amount (current value, currency, exchange rate and Kenya Shilling equivalent)**
[insert year]	*[insert amount and percentage]*	Contract Identification: *[indicate complete contract name/ number, and any other identification]* Name of Procuring Entity: *[insert full name]* Address of Procuring Entity: *[insert street/city/country]* Reason(s) for nonperformance: *[indicate main reason(s)]*	*[insert amount]*
Pending Litigation, in accordance with Section III, Evaluation and Qualification Criteria			
☐ No pending litigation in accordance with Section III, Evaluation and Qualification Criteria, Sub-Factor 2.3. ☐ Pending litigation in accordance with Section III, Evaluation and Qualification Criteria, Sub-Factor 2.3 as indicated below.			

Year of dispute	Amount in dispute (currency)	Contract Identification	Total Contract Amount (currency), Kenya Shilling Equivalent (exchange rate)
		Contract Identification: _____ Name of Procuring Entity: _____ Address of Procuring Entity: _____ Matter in dispute: _____ Party who initiated the dispute: ____ Status of dispute: _____	
		Contract Identification: Name of Procuring Entity: Address of Procuring Entity: Matter in dispute: Party who initiated the dispute: Status of dispute:	

Litigation History in accordance with Section III, Evaluation and Qualification Criteria

☐ No Litigation History in accordance with Section III, Evaluation and Qualification Criteria, Sub-Factor 2.4.

☐ Litigation History in accordance with Section III, Evaluation and Qualification Criteria, Sub-Factor 2.4 as indicated below.

Year of award	Outcome as percentage of Net Worth	Contract Identification	Total Contract Amount (currency), Kenya Shilling Equivalent (exchange rate)
[insert year]	*[insert percentage]*	Contract Identification: [indicate complete contract name, number, and any other identification] Name of Procuring Entity: *[insert full name]* Address of Procuring Entity: *[insert street/city/country]* Matter in dispute: *[indicate main issues in dispute]* Party who initiated the dispute: *[indicate "Procuring Entity" or "Contractor"]* Reason(s) for Litigation and award decision *[indicate main reason(s)]*	*[insert amount]*

6.4 FORM FIN –3.1:

Financial Situation and Performance

Tenderer's Name:_____
Date:_____
JV Member's Name_____
ITT No. and title:_____

6.4.1. Financial Data

Type of Financial information in_____ (currency)	**Historic information for previous _____*years,* _____ (amount in currency, currency, exchange rate*, USD equivalent)**				
	Year 1	Year 2	Year 3	Year 4	Year 5
Statement of Financial Position (Information from Balance Sheet)					
Total Assets (TA)					
Total Liabilities (TL)					
Total Equity/Net Worth (NW)					
Current Assets (CA)					
Current Liabilities (CL)					
Working Capital (WC)					
Information from Income Statement					
Total Revenue (TR)					
Profits Before Taxes (PBT)					
Cash Flow Information					
Cash Flow from Operating Activities					

**Refer to ITT 15 for the exchange rate*

6.4.2 Sources of Finance

Specify sources of finance to meet the cash flow requirements on works currently in progress and for future contract commitments.

No.	Source of finance	Amount (Kenya Shilling equivalent)
1		
2		
3		

6.4.3 Financial documents

The Tenderer and its parties shall provide copies of financial statements for_____years pursuant Section III, Evaluation and Qualifications Criteria, Sub-factor 3.1. The financial statements shall:

a) reflect the financial situation of the Tenderer or in case of JV member, and not an affiliated entity (such as parent company or group member).
b) be independently audited or certified in accordance with local legislation.
c) be complete, including all notes to the financial statements.
d) correspond to accounting periods already completed and audited.

Attached are copies of financial statements [1] for the_____years required above; and complying with the requirements

6.5 FORM FIN – 3.2:

Average Annual Construction Turnover

Tenderer's Name:_____
Date:_____
JV Member's Name_____
ITT No. and title:_____

	Annual turnover data (construction only)		
Year	**Amount Currency**	**Exchange rate**	**Kenya Shilling equivalent**
[indicate year]	*[insert amount and indicate currency]*		
Average Annual Construction Turnover *			

* See Section III, Evaluation and Qualification Criteria, Sub-Factor 3.2.

6.6 FORM FIN –3.3:

Financial Resources

Specify proposed sources of financing, such as liquid assets, unencumbered real assets, lines of credit, and other financial means, net of current commitments, available to meet the total construction cashflow demands of the subject contractor contracts as specified in Section III, Evaluation and Qualification Criteria.

6.7 FORM FIN–3.4:

Current Contract Commitments / Works in Progress

Tenderers and each member to a JV should provide information on their current commitments on all contracts that have been awarded, or for which a letter of intent or acceptance has been received, or for contracts approaching completion, but for which an unqualified, full completion certificate has yet to be issued.

Starting Year	Ending Year	Contract Identification	Role of Tenderer
		Contract name: _____ Brief Description of the Works performed by the Tenderer: _____ Amount of contract: _____ Name of Procuring Entity: _____ Address: _____	
		Contract name: _____ Brief Description of the Works performed by the Tenderer: _____ Amount of contract: _____ Name of Procuring Entity: _____ Address: _____	
		Contract name: _____ Brief Description of the Works performed by the Tenderer: _____ Amount of contract: _____ Name of Procuring Entity: _____ Address: _____	

6.8 FORM EXP -4.1

General Construction Experience

Tenderer's Name:_____
Date:_____
JV Member's Name:_____
ITT No. and title:_____

Similar Contract No.	**Information**			
Contract Identification				
Award date				
Completion date				
Role in Contract	Prime Contractor ☐	Member in JV ☐	Management Contractor ☐	Sub-contractor ☐
Total Contract Amount			**Kenya Shilling**	
If member in a JV or sub-contractor, specify participation in total Contract amount				
Procuring Entity's Name:				
Address: Telephone/fax number E-mail:				

6.9 FORM EXP -4.2(a)

Specific Construction and Contract Management Experience

Tenderer's Name:_____
Date:_____
JV Member's Name_____
ITT No. and title:_____

Similar Contract No.	**Information**
Description of the similarity in accordance with Sub-Factor 4.2(a) of Section III:	
1. Amount	
2. Physical size of required works items	
3. Complexity	
4. Methods/Technology	
5. Construction rate for key activities	
6. Other Characteristics	

6.10 FORM EXP -4.2(b)

Construction Experience in Key Activities

Tenderer's Name:_____
Date:_____
Tenderer's JV Member Name:_____
Sub-contractor's Name[2] (as perITT34):_____
ITT No. and title:_____

All Sub-contractors for key activities must complete the information in this form as per ITT 34 and Section III, Evaluation and Qualification Criteria, Sub-Factor 4.2.

1. Key Activity No One: _

	Information			
Contract Identification				
Award date				
Completion date				
Role in Contract	Prime Contractor ☐	Member in JV ☐	Management Contractor ☐	Sub-contractor ☐
Total Contract Amount			**Kenya Shilling**	
Quantity (Volume, number or rate of production, as applicable) performed under the contract per year or part of the year	Total quantity in the contract (i)	Percentage participation (ii)		Actual Quantity Performed (i) x (ii)
Year 1				
Year 2				
Year 3				
Year 4				
Procuring Entity's Name:				
Address: Telephone/fax number E-mail:				

	Information
Description of the key activities in accordance with Sub-Factor 4.2(b) of Section III:	

2. Activity No. Two

3. . ……

OTHER FORMS

7. FORM OF TENDER

(Amended and issued pursuant to PPRA CIRCULAR No. 02/2022)

INSTRUCTIONS TO TENDERERS

i) *All italicized text is to help the Tenderer in preparing this form.*

ii) *The Tenderer must prepare this Form of Tender on stationery with its letterhead clearly showing the Tenderer's complete name and business address. Tenderers are reminded that this is a mandatory requirement.*

iii) *Tenderer must complete and sign CERTIFICATE OF INDEPENDENT TENDER DETERMINATION and the SELF DECLARATION FORMS OF THE TENDERER as listed under (xxii) below.*

Date of this Tender submission: .....*[insert date (as day, month and year) of Tender submission] Tender* **Name and Identification**: .....*[insert identification] Alternative* **No.**: .....*[insert identification No if this is a Tender for an alternative]*

To: ..... *[Insert complete name of Procuring Entity]*

Dear Sirs,

1. In accordance with the Conditions of Contract, Specifications, Drawings and Bills of Quantities for the execution of the above-named Works, we, the undersigned offer to construct and complete the Works and remedy any defects therein for the sum of Kenya Shillings [*[Amount in figures]* _____Kenya Shillings *[amount in words]*_____

   The above amount includes foreign currency amount (s) of [*state figure or a percentage and currency*] [figures] _____[words]_____
   _____

   The percentage or amount quoted above does not include provisional sums, and only allows not more than two foreign currencies.

2. We undertake, if our tender is accepted, to commence the Works as soon as is reasonably possible after the receipt of the Engineer's notice to commence, and to complete the whole of the Works comprised in the Contract within the time stated in the Particular Conditions of Contract.

3. We agree to adhere by this tender until_____*[Insert date]*, and it shall remain binding upon us and may be accepted at any time before that date.

4. Unless and until a formal Agreement is prepared and executed this tender together with your written acceptance thereof, shall constitute a binding Contract between us. We further understand that you are not bound to accept the lowest or any tender you may receive.

5. We, the undersigned, further declare that:

   i) *No reservations:* We have examined and have no reservations to the tender document, including Addenda issued in accordance with ITT 8;

   ii) *Eligibility:* We meet the eligibility requirements and have no conflict of interest in accordance with ITT 3 and 4;

   iii) *Tender-Securing Declaration:* We have not been suspended nor declared ineligible by the Procuring Entity based on execution of a Tender-Securing or Proposal-Securing Declaration in the Procuring Entity's

Country in accordance with ITT 19.8;

(iv) Conformity: We offer to execute in conformity with the tendering documents and in accordance with the implementation and completion specified in the construction schedule, the following Works: *[insert a brief description of the Works];*

(v) Tender Price: The total price of our Tender, excluding any discounts offered in item 1 above is: *[Insert one of the options below as appropriate]*

(vi) **Option1,** in case of one lot: Total price is: [*insert the total price of the Tender in words and figures, indicating the various amounts and the respective currencies*]; Or

Option2, in case of multiple lots:

a) *Total price of each lot* [*insert the total price of each lot in words and figures, indicating the various amounts and the respective currencies*]; and

b) *Total price of all lots* (sum of all lots) [*insert the total price of all lots in words and figures, indicating the various amounts and the respective currencies*];

vii) Discounts: The discounts offered and the methodology for their application are:

viii) The discounts offered are: [*Specify in detail each discount offered.*]

ix) The exact method of calculations to determine the net price after application of discounts is shown below: [*Specify in detail the method that shall be used to apply the discounts*];

x) *Tender Validity Period:* Our Tender shall be valid for the period specified in TDS 18.1 (as amended, if applicable) from the date fixed for the Tender submission deadline specified in TDS 22.1(as amended, if applicable), and it shall remain binding upon us and may be accepted at any time before the expiration of that period;

xi) *Performance Security:* If our Tender is accepted, we commit to obtain a Performance Security in accordance with the Tendering document;

xii) *One Tender Per Tender:* We are not submitting any other Tender(s) as an individual Tender, and we are not participating in any other Tender(s) as a Joint Venture member or as a subcontractor, and meet the requirements of ITT3.4, other than alternative Tenders submitted in accordance with ITT 13.3;

xiii) *Suspension and Debarment:* We, along with any of our subcontractors, suppliers, Engineer, manufacturers, or service providers for any part of the contract, are not subject to, and not controlled by any entity or individual that is subject to, a temporary suspension or a debarment imposed by the Public Procurement Regulatory Authority or any other entity of the Government of Kenya, or any international organization.

xiv) *State-owned enterprise or institution:* [*select the appropriate option and delete the other*] [*We are not a state-owned enterprise or institution*]/ [*We are a state-owned enterprise or institution but meet the requirements of ITT 3.7*];

xv) *Commissions, gratuities, fees:* We have paid, or will pay the following commissions, gratuities, or fees with respect to the tender process or execution of the Contract: *[insert complete name of each Recipient, its full address, the reason for which each commission or gratuity was paid and the amount and currency of each such commission or gratuity]*

Name of Recipient	**Address**	**Reason**	**Amount**

(If none has been paid or is to be paid, indicate "none.")

xvi) *Binding Contract:* We understand that this Tender, together with your written acceptance thereof included in your Letter of Acceptance, shall constitute a binding contract between us, until a formal contract is prepared and executed;

xvii) *Not Bound to Accept:* We understand that you are not bound to accept the lowest evaluated cost Tender, the Most Advantageous Tender or any other. Tender that you may receive;

xviii) *Fraud and Corruption:* We hereby certify that we have taken steps to ensure that no person acting for us or on our behalf engages in any type of Fraud and Corruption;

xix) *Collusive practices:* We hereby certify and confirm that the tender is genuine, non-collusive and made with the intention of accepting the contract if awarded. To this effect we have signed the "Certificate of Independent Tender Determination" attached below.

xx) We undertake to adhere by the Code of Ethics for Persons Participating in Public Procurement and Asset Disposal, copy available from_____(*specify website*) during the procurement process and the execution of any resulting contract.

xxi) **Beneficial Ownership Information:** We commit to provide to the procuring entity the Beneficial Ownership Information in conformity with the Beneficial Ownership Disclosure Form upon receipt of notification of intention to enter into a contract in the event we are the successful tenderer in this subject procurement proceeding.

xxii) We, the Tenderer, have duly completed, signed and stamped the following Forms as part of our Tender:

a) Tenderer's Eligibility; Confidential Business Questionnaire – to establish we are not in any conflict to interest.

b) Certificate of Independent Tender Determination – to declare that we completed the tender without colluding with other tenderers.

c) Self-Declaration of the Tenderer– to declare that we will, if awarded a contract, not engage in any form of fraud and corruption.

d) Declaration and commitment to the Code of Ethics for Persons Participating in Public Procurement and Asset Disposal.

Further, we confirm that we have read and understood the full content and scope of fraud and corruption as informed in "**Appendix 1- Fraud and Corruption**" attached to the Form of Tender.

Name of the Tenderer: *[*insert complete name of person signing the*

Tender]

Name of the person duly authorized to sign the Tender on behalf of the Tenderer: **[*insert complete name of person duly authorized to sign the Tender*]

Title of the person signing the Tender: [*insert complete title of the person signing the Tender*] Signature **of**

the person named above: [*insert signature of person whose name and capacity are shown above*] **Date**

signed [*insert date of signing*] day of [*insert month*], [*insert year*]

Date signed_____day of_____,_____

Notes

** In the case of the Tender submitted by joint venture specify the name of the Joint Venture as Tenderer*

*** Person signing the Tender shall have the power of attorney given by the Tenderer to be attached with the Tender,*

A. TENDERER'S ELIGIBILITY-CONFIDENTIAL BUSINESS QUESTIONNAIRE

Instruction to Tenderer

Tender is instructed to complete the particulars required in this Form, *one form for each entity if Tender is a JV.* Tenderer is further reminded that it is an offence to give false information on this Form.

i) Tenderer's details

	ITEM	DESCRIPTION
1	Name of the Procuring Entity	
2	Reference Number of the Tender	
3	Date and Time of Tender Opening	
4	Name of the Tenderer	
5	Full Address and Contact Details of the Tenderer.	1. Country 2. City 3. Location 4. Building 5. Floor 6. Postal Address 7. Name and email of contact person.
6	Current Trade License Registration Number and Expiring date	
7	Name, country and full address (*postal and physical addresses, email, and telephone number*) of Registering Body/Agency	
8	Description of Nature of Business	
9	Maximum value of business which the Tenderer handles.	
10	State if Tenders Company is listed in stock exchange, give name and full address (*postal and physical addresses, email, and telephone number*) of state which stock exchange	

General and Specific Details

ii) Sole Proprietor, provide the following details.

Name in full_____Age_____
Nationality_____Country of Origin_____
Citizenship _____

iii) Partnership, provide the following details.

	Names of Partners	Nationality	Citizenship	% Shares owned
1				
2				
3				

(iv) Registered Company, provide the following details.

i) Private or public Company _____

ii) State the nominal and issued capital of the Company

Nominal Kenya Shillings (Equivalent).....

Issued Kenya Shillings (Equivalent).....

iii) Give details of Directors as follows.

	Names of Director	Nationality	Citizenship	% Shares owned
1				
2				
3				

(v) DISCLOSURE OF INTEREST- Interest of the Firm in the Procuring Entity.

i) Are there any person/persons in…… (*Name of Procuring Entity)* who has/have an interest or relationship in this firm? Yes/No……

If yes, provide details as follows.

	Names of Person	Designation in the Procuring Entity	Interest or Relationship with Tenderer
1			
2			
3			

ii) Conflict of interest disclosure

	Type of Conflict	Disclosure YES OR NO	If YES provide details of the relationship with Tenderer
1	Tenderer is directly or indirectly controls, is controlled by or is under common control with another tenderer.		
2	Tenderer receives or has received any direct or indirect subsidy from another tenderer.		
3	Tenderer has the same legal representative as another tenderer		
4	Tender has a relationship with another tenderer, directly or through common third parties that puts it in a position to influence the tender of another tenderer, or influence the decisions of the Procuring Entity regarding this tendering process.		
5	Any of the Tenderer's affiliates participated as a consultant in the preparation of the design or technical specifications of the works that are the subject of the tender.		
6	Tenderer would be providing goods, works, non-consulting services or consulting services during implementation of the contract specified in this Tender Document.		
7	Tenderer has a close business or family relationship with a professional staff of the Procuring Entity who are directly or indirectly involved in the preparation of the Tender document or specifications of the Contract, and/or the Tender evaluation process of such contract.		
8	Tenderer has a close business or family relationship with a professional staff of the Procuring Entity who would be involved in the implementation or supervision of such Contract.		
9	Has the conflict stemming from such relationship stated in item 7 and 8 above been resolved in a manner acceptable to the Procuring Entity throughout the tendering process and execution of the Contract?		

Certification

On behalf of the Tenderer, I certify that the information given above is complete, current and accurate as at the date of submission.

Full Name_____ Title or Designation_____

_____ _____

(Signature) *(Date)*

B. CERTIFICATE OF INDEPENDENT TENDER DETERMINATION

I, the undersigned, in submitting the accompanying Letter of Tender to the_____[Name of Procuring Entity] for:_____[Name and number of tenders] in response to the request for tenders made by:_____[Name of Tenderer] do hereby make the following statements that I certify to be true and complete in every respect:

I certify, on behalf of_____[Name of Tenderer] that:

1. I have read and I understand the contents of this Certificate;

2. I understand that the Tender will be disqualified if this Certificate is found not to be true and complete in every respect;

3. I am the authorized representative of the Tenderer with authority to sign this Certificate, and to submit the Tender on behalf of the Tenderer;

4. For the purposes of this Certificate and the Tender, I understand that the word "competitor" shall include any individual or organization, other than the Tenderer, whether or not affiliated with the Tenderer, who:
   a) has been requested to submit a Tender in response to this request for tenders;
   b) could potentially submit a tender in response to this request for tenders, based on their qualifications, abilities or experience;

5. The Tenderer discloses that [check one of the following, as applicable]:
   a) The Tenderer has arrived at the Tender independently from, and without consultation, communication, agreement or arrangement with, any competitor;
   b) the Tenderer has entered into consultations, communications, agreements or arrangements with one or more competitors regarding this request for tenders, and the Tenderer discloses, in the attached document(s), complete details thereof, including the names of the competitors and the nature of, and reasons for, such consultations, communications, agreements or arrangements;

6. In particular, without limiting the generality of paragraphs (5) (a) or (5) (b) above, there has been no consultation, communication, agreement or arrangement with any competitor regarding:
   a) prices;
   b) methods, factors or formulas used to calculate prices;
   c) the intention or decision to submit, or not to submit, a tender; or
   d) the submission of a tender which does not meet the specifications of the request for Tenders; except as specifically disclosed pursuant to paragraph (5) (b) above;

7. In addition, there has been no consultation, communication, agreement or arrangement with any competitor regarding the quality, quantity, specifications or delivery particulars of the works or services to which this request for tenders relates, except as specifically authorized by the procuring authority or as specifically disclosed pursuant to paragraph (5) (b) above;

8. The terms of the Tender have not been, and will not be, knowingly disclosed by the Tenderer, directly or indirectly, to any competitor, prior to the date and time of the official tender opening, or of the awarding of the Contract, whichever comes first, unless otherwise required by law or as specifically disclosed pursuant to paragraph (5) (b) above.

Name_____

Title_____

Date_____

[Name, title and signature of authorized agent of Tenderer and Date]

SELF-DECLARATION FORMS

FORM SD1

SELF DECLARATION THAT THE PERSON/TENDERER IS NOT DEBARRED IN THE MATTER OF THE PUBLIC PROCUREMENT AND ASSET DISPOSAL ACT 2015.

I, ……., of Post Office Box ……..……. being a resident of …….. in the Republic of ……. do hereby make a statement as follows: -

1. THAT I am the Company Secretary/Chief Executive/Managing Director/Principal Officer/Director of ……....…….. *(insert name of the Company)* who is a Bidder in respect of Tender No. …….. for ……. *(insert tender title/description)* for ……. *(insert name of the Procuring entity)* and duly authorized and competent to make this statement.

2. THAT the aforesaid Bidder, its directors and subcontractors have not been debarred from participating in procurement proceeding under Part IV of the Act.

3. THAT what is deponed to herein above is true to the best of my knowledge, information and belief.

…….	…….	……
(Title)	(Signature)	(Date)

Bidder Official Stamp

FORM SD2

SELF DECLARATION THAT THE TENDERER WILL NOT ENGAGE IN ANY CORRUPT OR FRAUDULENT PRACTICE

I, ……. of P.O. Box ……. being a resident of……. in the Republic of…_____……. .do hereby make a statement as follows: -

1. THAT I am the Chief Executive/Managing Director/directors/Director of ……...…… *(insert name of the Company)* who is a Bidder in respect of Tender No. …….. for ……... *(insert tender title/description)* for …… *(insert name of the Procuring entity)* and duly authorized and competent to make this statement.

2. THAT the aforesaid Bidder, its servants and/or agents /subcontractors will not engage in any corrupt or fraudulent practice and has not been requested to pay any inducement to any member of the Board, Management, Staff and/or employees and/or agents of……. *(insert name of the Procuring entity)* which is the procuring entity.

3. THAT the aforesaid Bidder, its servants and/or agents /subcontractors have not offered any inducement to any member of the Board, Management, Staff and/or employees and/or agents of……... *(name of the procuring entity)*

4. THAT the aforesaid Bidder will not engage/has not engaged in any corrosive practice with other bidders participating in the subject tender

5. THAT what is deponed to herein above is true to the best of my knowledge, information and belief.

……	……	……
(Title)	(Signature)	(Date)

Bidder's Official Stamp

DECLARATION AND COMMITMENT TO THE CODE OF ETHICS

I …….....……. (person) on behalf of *(Name of the Business/Company/Firm*) …….....declare that I have read and fully understood the contents of the Public Procurement & Asset Disposal Act, 2015, Regulations and the Code of Ethics for persons participating in Public Procurement and Asset Disposal and my responsibilities under the Code.

I do hereby commit to abide by the provisions of the Code of Ethics for persons participating in Public Procurement and Asset Disposal.

Name of Authorized signatory.....

Sign.....

Position.....

Office address..... Telephone.....
E-mail.....
Name of the Firm/Company.....
Date.....

(Company Seal/Rubber Stamp where
applicable) Witness

Name.....

Sign.....

Date.....

D. APPENDIX 1-FRAUD AND CORRUPTION

(Appendix 1 shall not be modified)

1. Purpose

1.1 The Government of Kenya's Anti-Corruption and Economic Crime laws and their sanction's policies and procedures, Public Procurement and Asset Disposal Act *(no. 33 of 2015)* and its Regulation, and any other Kenya's Acts or Regulations related to Fraud and Corruption, and similar offences, shall apply with respect to Public Procurement Processes and Contracts that are governed by the laws of Kenya.

2. Requirements

2.1 The Government of Kenya requires that all parties including Procuring Entities, Tenderers, (applicants/proposers), Consultants, Contractors and Suppliers; any Sub-contractors, Sub-consultants, Service providers or Suppliers; any Agents (whether declared or not); and any of their Personnel, involved and engaged in procurement under Kenya's Laws and Regulation, observe the highest standard of ethics during the procurement process, selection and contract execution of all contracts, and refrain from Fraud and Corruption and fully comply with Kenya's laws and Regulations as per paragraphs 1.1 above.

2.2 Kenya's public procurement and asset disposal act *(no. 33 of 2015)* under Section 66 describes rules to be followed and actions to be taken in dealing with Corrupt, Coercive, Obstructive, Collusive or Fraudulent practices, and Conflicts of Interest in procurement including consequences for offences committed. A few of the provisions noted below highlight Kenya's policy of no tolerance for such practices and behavior:

1) a person to whom this Act applies shall not be involved in any corrupt, coercive, obstructive, collusive or fraudulent practice; or conflicts of interest in any procurement or asset disposal proceeding;

2) A person referred to under subsection (1) who contravenes the provisions of that sub-section commits an offence;

3) Without limiting the generality of the subsection (1) and (2), the person shall be—
   a) disqualified from entering into a contract for a procurement or asset disposal proceeding; or
   b) if a contract has already been entered into with the person, the contract shall be voidable;

4) The voiding of a contract by the procuring entity under subsection (7) does not limit any legal remedy the procuring entity may have;

5) An employee or agent of the procuring entity or a member of the Board or committee of the procuring entity who has a conflict of interest with respect to a procurement—
   a) shall not take part in the procurement proceedings;
   b) shall not, after a procurement contract has been entered into, take part in any decision relating to the procurement or contract; and
   c) shall not be a subcontractor for the bidder to whom was awarded contract, or a member of the group of bidders to whom the contract was awarded, but the subcontractor appointed shall meet all the requirements of this Act.

6) An employee, agent or member described in subsection (1) who refrains from doing anything prohibited under that subsection, but for that subsection, would have been within his or her duties shall disclose the conflict of interest to the procuring entity;

7) If a person contravenes subsection (1) with respect to a conflict of interest described in subsection (5) (a) and the contract is awarded to the person or his relative or to another person in whom one of them had a direct or indirect pecuniary interest, the contract shall be terminated and all costs incurred by the public entity shall be made good by the awarding officer. Etc.

2.3 In compliance with Kenya's laws, regulations and policies mentioned above, the Procuring Entity:
   a) Defines broadly, for the purposes of the above provisions, the terms set forth below as follows:

i) "Corrupt practice" is the offering, giving, receiving, or soliciting, directly or indirectly, of anything of value to influence improperly the actions of another party;

ii) "Fraudulent practice" is any act or omission, including misrepresentation, that knowingly or recklessly misleads, or attempts to mislead, a party to obtain financial or other benefit or to avoid an obligation;

iii) "Collusive practice" is an arrangement between two or more parties designed to achieve an improper purpose, including to influence improperly the actions of another party;

iv) "Coercive practice" is impairing or harming, or threatening to impair or harm, directly or indirectly, any party or the property of the party to influence improperly the actions of a party;

v) "Obstructive practice" is:

- deliberately destroying, falsifying, altering, or concealing of evidence material to the investigation or making false statements to investigators in order to materially impede investigation by Public Procurement Regulatory Authority (PPRA) or any other appropriate authority appointed by Government of Kenya into allegations of a corrupt, fraudulent, coercive, or collusive practice; and/or threatening, harassing, or intimidating any party to prevent it from disclosing its knowledge of matters relevant to the investigation or from pursuing the investigation; or

- acts intended to materially impede the exercise of the PPRA's or the appointed authority's inspection and audit rights provided for under paragraph 2.3 e. below.

b) Defines more specifically, in accordance with the above procurement Act provisions set forth for fraudulent and collusive practices as follows:

"Fraudulent practice" includes a misrepresentation of fact in order to influence a procurement or disposal process or the exercise of a contract to the detriment of the procuring entity or the tenderer or the contractor, and includes collusive practices amongst tenderers prior to or after tender submission designed to establish tender prices at artificial non-competitive levels and to deprive the procuring entity of the benefits of free and open competition.

c) Rejects a proposal for award[1] of a contract if PPRA determines that the firm or individual recommended for award, any of its personnel, or its agents, or its sub-consultants, sub-contractors, service providers, suppliers and/ or their employees, has, directly or indirectly, engaged in corrupt, fraudulent, collusive, coercive, or obstructive practices in competing for the contract in question;

d) Pursuant to the Kenya's above stated Acts and Regulations, may sanction or recommend to appropriate authority(is) for sanctioning and debarment of a firm or individual, as applicable under the Acts and Regulations;

e) Requires that a clause be included in Tender documents and Request for Proposal documents requiring (I) Tenderers (applicants/proposers), Consultants, Contractors, and Suppliers, and their Sub-contractors, Sub-consultants, Service providers, Suppliers, Agents personnel, permit the PPRA or any other appropriate authority appointed by Government of Kenya to inspect[2] all accounts, records and other documents relating to the procurement process, selection and/or contract execution, and to have them audited by auditors appointed by the PPRA or any other appropriate authority appointed by Government of Kenya; and

f) Pursuant to Section 62 of the above Act, requires Applicants/Tenderers to submit along with their Applications/Tenders/Proposals a "Self-Declaration Form" as included in the procurement document declaring that they and all parties involved in the procurement process and contract execution have not engaged/will not engage in any corrupt or fraudulent practices.

---

[1] *For the avoidance of doubt, a party's ineligibility to be awarded a contract shall include, without limitation, (I) applying for pre-qualification, expressing interest in a consultancy, and tendering, either directly or as a nominated sub-contractor, nominated consultant, nominated manufacturer or supplier, or nominated service provider, in respect of such contract, and (ii) entering into an addendum or amendment introducing a material modification to any existing contract.*

[2] *Inspections in this context usually are investigative (i.e., forensic) in nature. They involve fact-finding activities undertaken by the Investigating Authority or persons appointed by the Procuring Entity to address specific matters related to investigations/audits, such as evaluating the veracity of an allegation of possible Fraud and Corruption, through the appropriate mechanisms. Such activity includes but is not limited to: accessing and examining a firm's or individual's financial records and information, and making copies thereof as relevant; accessing and examining any other documents, data and information (whether in hard copy or electronic format) deemed relevant for the investigation/audit, and making copies thereof as relevant; interviewing staff and other relevant individuals; performing physical inspections and site visits; and obtaining third party verification of information.*

FORM OF TENDER SECURITY- [Option 1–Demand Bank Guarantee]

Beneficiary:_____

Request for Tenders No:

_____

Date:_____

TENDER GUARANTEE No.:_____

Guarantor: _____

1. We have been informed that_____(here in after called "the Applicant") has submitted or will submit to the Beneficiary its Tender (here in after called" the Tender") for the execution of_____ under Request for Tenders No._____("the ITT").

2. Furthermore, we understand that, according to the Beneficiary's conditions, Tenders must be supported by a Tender guarantee.

3. At the request of the Applicant, we, as Guarantor, hereby irrevocably undertake to pay the Beneficiary any sum or sums not exceeding in total an amount of_____(_____) upon receipt by us of the Beneficiary's complying demand, supported by the Beneficiary's statement, whether in the demand itself or a separate signed document accompanying or identifying the demand, stating that either the Applicant:

(a) has withdrawn its Tender during the period of Tender validity set forth in the Applicant's Letter of Tender ("the Tender Validity Period"), or any extension thereto provided by the Applicant; or

b) having been notified of the acceptance of its Tender by the Beneficiary during the Tender Validity Period or any extension there to provide by the Applicant, (I) has failed to execute the contract agreement, or (ii) has failed to furnish the Performance.

4. This guarantee will expire: (a) if the Applicant is the successful Tenderer, upon our receipt of copies of the contract agreement signed by the Applicant and the Performance Security and, or (b) if the Applicant is not the successful Tenderer, upon the earlier of (i) our receipt of a copy of the Beneficiary's notification to the Applicant of the results of the Tendering process; or (ii) thirty days after the end of the Tender Validity Period.

5. Consequently, any demand for payment under this guarantee must be received by us at the office indicated above onor before that date.

_____

[signature(s)]

Note: All italicized text is for use in preparing this form and shall be deleted from the final product.

FORMAT OF TENDER SECURITY [Option 2–Insurance Guarantee]

TENDER GUARANTEE No.: _____

1. Whereas …… [*Name of the tenderer]* (hereinafter called "the tenderer") has submitted its tender dated …… [*Date of submission of tender]* for the …… *[Name and/or description of the tender]* (hereinafter called "the Tender") for the execution of_____under Request for Tenders No._____("the ITT").

2. KNOW ALL PEOPLE by these presents that WE …… of …… [**Name of Insurance Company**] having our registered office at …… (hereinafter called "the Guarantor"), are bound unto …….. [*Name of Procuring Entity*] (hereinafter called "the Procuring Entity") in the sum of …… (Currency and guarantee amount) for which payment well and truly to be made to the said Procuring Entity, the Guarantor binds itself, its successors and assigns, jointly and severally, firmly by these presents.

   Sealed with the Common Seal of the said Guarantor this ___day of _____ 20 __.

3. NOW, THEREFORE, THE CONDITION OF THIS OBLIGATION is such that if the Applicant:

   a) has withdrawn its Tender during the period of Tender validity set forth in the Principal's Letter of Tender ("the Tender Validity Period"), or any extension thereto provided by the principal; or

   b) having been notified of the acceptance of its Tender by the Procuring Entity during the Tender Validity Period or any extension thereto provided by the principal; (I) failed to execute the Contract agreement; or (ii) has failed to furnish the Performance Security, in accordance with the Instructions to tenderers ("ITT") of the Procuring Entity's Tendering document.

   then the guarantee undertakes to immediately pay to the Procuring Entity up to the above amount upon receipt of the Procuring Entity's first written demand, without the Procuring Entity having to substantiate its demand, provided that in its demand the Procuring Entity shall state that the demand arises from the occurrence of any of the above events, specifying which event(s) has occurred.

4. This guarantee will expire: (a) if the Applicant is the successful Tenderer, upon our receipt of copies of the contract agreement signed by the Applicant and the Performance Security and, or (b) if the Applicant is not the successful Tenderer, upon the earlier of (I) our receipt of a copy of the Beneficiary's notification to the Applicant of the results of the Tendering process; or (ii)twenty-eight days after the end of the Tender Validity Period.

5. Consequently, any demand for payment under this guarantee must be received by us at the office indicated above on or before that date.

_____	_____
[Date]	*[Signature of the Guarantor]*
_____	_____
[Witness]	*[Seal]*

Note: All italicized text is for use in preparing this form and shall be deleted from the final product.

FORM OF TENDER-SECURING DECLARATION

[The Bidder shall complete this Form in accordance with the instructions indicated] Date:

..... *[Insert date (as day, month and year) of Tender Submission]*

Tender No.: ..... *[Insert number of tendering processes]*

To: ..... *[Insert complete name of*

Purchaser] I/We, the undersigned, declare that:

1. I/We understand that, according to your conditions, bids must be supported by a Tender-Securing Declaration.

2. I/We accept that I/we will automatically be suspended from being eligible for tendering in any contract with the Purchaser for the period of time of [insert number of months or years] starting on [insert date], if we are in breach of our obligation(s) under the bid conditions, because we–(a) have withdrawn our tender during the period of tender validity specified by us in the Tendering Data Sheet; or (b) having been notified of the acceptance of our Bid by the Purchaser during the period of bid validity, (I) fail or refuse to execute the Contract, if required, or (ii) fail or refuse to furnish the Performance Security, in accordance with the instructions to tenders.

3. I/We understand that this Tender Securing Declaration shall expire if we are not the successful Tenderer(s), upon the earlier of:
   a) our receipt of a copy of your notification of the name of the successful Tenderer; or
   b) thirty days after the expiration of our Tender.

4. I/We understand that if I am/we are/in a Joint Venture, the Tender Securing Declaration must be in the name of the Joint Venture that submits the bid, and the Joint Venture has not been legally constituted at the time of bidding, the Tender Securing Declaration shall be in the names of all future partners as named in the letter of intent.

   Signed:……..……..

   Capacity / title (director or partner or sole proprietor, etc.) …….…….

   Name:……..

   Duly authorized to sign the bid for and on behalf of: *[insert complete name of*

   Tenderer] Dated on……. day of…….……. *[Insert date of*

   signing]

   Seal or stamp

FORM OF SITE VISIT

CERTIFICATE OF TENDERER'S VISIT TO SITE

This is to certify that

[*Name/s*]……

……..

Being the authorized representative/Agent of [*Name of bidder*]

……..

……

participated in the organised inspection visit of the site of the works for the

held on……...day of……20……..

Signed……
(Bidder's Representative and Designation)

.....……...……..
(Employer's Representative)

NOTE: This part is to be completed at the time of the organized site visit.

or

This is to certify that we,..... have on our own arrangements visited the site of the works and have acquinted ourselves with the scope of the works before submitting our tender for the

....
Name of Bidder's representative signature

Date:.....

NOTE: This part is to be completed if the bidder did not take part in the organized site visit.

Appendix to Tender

Schedule of Currency requirements

Summary of currencies of the Tender for_____*[insert name of Section of the Works]*

Name of currency	***Amounts payable***
Local currency: _____	
Foreign currency #1: _____	
Foreign currency #2: _____	
Foreign currency #3: _____	
Provisional sums expressed in local currency _____	[To be entered by the Procuring Entity]

5. TECHNICAL PROPOSAL

The tender shall complete these sections as a Technical proposal to indicate how he/she intends to proceed with the works. The Procuring entity will review these Proposals and determine the extent to which they meet the required standards to complete the works.

5.1 Site Organization

[Insert Site Organization information]

5.2 Method Statement

[Insert Method Statement]

5.3 Mobilization Schedule

[Insert Mobilization Schedule]

5.4 Construction Schedule

[Insert Construction Schedule]

PART 2 - WORKS' REQUIREMENTS

Bill No.1	GENERAL: Office administration & Preliminaries					Page 1 of 8
Item No.	**Description**	**Units**	**Unit Rate (K$hs)**	**Quantity**	**Amount**	**Technology**
01-60-005	Publicity Sign Boards	No.		1.00		LB-MB
01-60-007	Material testing	PC SUM	30,000.00	1.00	30,000.00	
01-80-012	Allow prime cost sum 170,000 for project administrative costs	P.C SUM	170,000.00	1.00	170,000.00	LB-MB
01-80-013	Extra over 01-80-026 for for profits and overheads	PC SUM	10%	1.00	17,000.00	LB-MB
01-80-026	Allow a prime cost sum of Kshs 250,000 for the facilitation of project site supervision staff (transport, allowance, airtime, stationaries etc)	PC SUM	250,000.00	1.00	250,000.00	LB-MB
01-80-027	Extra over 01-80-026 for for profits and overheads	%	10%	1.00	25,000.00	LB-MB
	Total curried forward					

Bill No. 4	SITE CLEARANCE					Page 2 of 8
Item No.	**Description**	**Units**	**Unit Rate (Kshs)**	**Quantity**	**Amount**	**Technology**
04-50-003	Light Bush clearing	m^2		40,000.00		LB
	Total curried forward					

Bill No. 7	EXCAVATION AND FILLING FOR STRUCTURES					Page 3 of 8
Item No.	**Description**	**Units**	**Unit Rate (Kshs)**	**Quantity**	**Amount**	**Technology**
07-50-001a	Excavation for struture in soft material-mechanical	M^3		490.50		MB
07-50-002a	Excavation for structure in hard material	M^3		126.40		MB
07-50-003	Selected granular material	sm		252.00		
07-70-004	Gabion installation	m^2		50.00		LB
07-70-005	Rockfill to gabions	m3		100.00		LB
	Total carried forward					

Bill No.8	CULVERT AND DRAINAGE WORKS					Page 4 of 8
Item No.	**Description**	**Units**	**Unit Rate (Kshs)**	**Quantity**	**Amount**	**Technology**
08-60-024	Provide, lay and joint pipe culvert of 600mm in diameter with surround with headwall, wingwalls and apron	MT		28.00		LB-MB
				-		
				-		
	Total curried forward					

Bill No.9	PASSAGE OF TRAFFIC					Page 5 of 8
Item No.	**Description**	**Units**	**Unit Rate (Kshs)**	**Quantity**	**Amount**	**Technology**
09-50-003	Diversions-3m wide	KM		0.15		MB
	Total curried Forward					

Bill No. 10	GRADING AND GRAVELING					Page 6 of 8
Item No.	**Description**	**Units**	**Unit Rate (Kshs)**	**Quantity**	**Amount**	**Technology**
10-50-001	Heavy grading without watering or Compaction	M^2		65,000		MB
10-60-001a	Graveling without watering and compaction	M^3		270		MB
	Total curried foward					

Bill No.17	CONCRETE WORKS (MAJOR STRUCTURES)					Page 7 of 8
Item No.	**Description**	**Units**	**Unit Rate (Ksh)**	**Quantity**	**Amount**	**Technology**
17-60-001	Provide, place and compact C15/20 concrete for blinding	m^3		31.80		LB
17-60-002a	Provide, place and compact C 25/20 concrete to walls, bases and to top slab	m^3		197.00		LB-MB
17-60-003	Vertical formwork class F1 finish	m^2		380.00		LB
17-60-005	Provide, cut, bend and fix into fix into position high yield reinforcement	Ton		6.50		LB
	Total Carried Forward to Summary:					

Bill of Quantities		Page: 8
	KALWA-NGUNI JNCTION ROAD	
Item No.	**Description**	**Amount (KShs)**
1	**GENERAL**	
4	**SITE CLEARANCE**	
7	**EXCAVATION AND FILLING FOR STRUCTURES**	
8	**CULVERT AND DRAINAGE WORKS**	
9	**PASSAGE OF TRAFFIC**	
10	**GRADING AND GRAVELLING**	
17	**CONCRETE WORKS (MAJOR STRUCTURES)**	
	Sub Total-A	
	Add 0.03% of Substotal A for Procurement Capacity Building Levy	
	Sub Total-B	
	Add VAT 16%	
	Carried to page on the Form of Tender	

Name of the Tenderer:

.....

Name of the person duly authorized to sign the Tender on behalf of the Tenderer:_

.....

Designation of the person signing the Tender:

.....

Signature of the person named above:

.....

Contact: .....

Date this .....day of.....

SCOPE OF WORKS

The Procuring Entity will prepare this

part. Notes for Preparing a Bills of

Quantities

These Notes for Preparing Bills of Quantities are intended only as information for the Procuring Entity or the person drafting the tendering documents. They should not be included in the final documents.

1. Objectives

1.1 The objectives of the Bills of Quantities are:

(a) to provide sufficient information on the quantities of Works to be performed to enable tenders to be prepared efficiently and accurately; and
(b) when a contract has been entered into, to provide a priced Bills of Quantities for use in the periodic valuation of Works executed.

1.2. In order to attain these objectives, Works should be itemized in the Bills of Quantities in sufficient detail to distinguish between the different classes of Works, or between Works of the same nature carried out in different locations or in other circumstances which may give rise to different considerations of cost. Consistent with these requirements, the layout and content of the Bills of Quantities should be as simple and brief as possible.

2. Content

The Bills of Quantities should be divided generally into the following sections:

a) Preamble;
b) Work Items (grouped into parts);
c) Day work Schedule; and
d) Summary.

3. Preamble

The Preamble should indicate the inclusiveness of the unit prices, and should state the methods of measurement that have been adopted in the preparation of the Bills of Quantities and that are to be used for the measurement of any part of the Works.

4. Rock

Where excavation, boring, or drilling is included in the Works, a comprehensive definition of rock (always a contentious topic in contract administration), should be provided in the Technical Specification and this definition should be used for the purposes of measurement and payment.

5. Work Items

The items in the Bill of Quantities should be grouped into sections to distinguish between those parts of the Works that by nature, location, access, timing, or any other special characteristics may give rise to different methods of construction, phasing of the Works, or considerations of cost. General items common to all parts of the Works may be grouped as a separate section in the Bills of Quantities. When a family of Price Adjustment Formulae are used, they should relate to appropriate sections in the Bills of Quantities.

6. Quantities

Quantities should be computed net from the Drawings, unless directed otherwise in the Contract, and no allowance should be made for bulking, shrinkage, or waste. Quantities should be rounded up or down where appropriate and spurious accuracy should be avoided.

7. Units of Measurement

The following units of measurement and abbreviations are recommended for use (unless other national units are mandatory in the country of the Procuring Entity).

Unit	Abbreviation	Unit	Abbreviation
cubic meter	m^3 *or* cu m	millimeter	mm
hectare	ha	month	mon
hour	h	number	nr
kilogram	kg	square meter	m^2 *or* sq m
lump sum	sum	square millimeter	mm^2 *or* sq mm
meter	m	week	wk
metric ton (1,000 kg)	t		

8. Ground and Excavation Levels

The commencing surface should be identified in the description of each item for work involving excavation, boring, or driving, for which the commencing surface is not also the original surface. The excavated surface should be identified in the description of each item for worki nvolving excavation for which the excavated surface is not also the final surface. The depths of work should be measured from the commencing surface to the excavated surface, as defined.

9. Day work Schedule

A Day work Schedule should be included if the probability of unforeseen work, outside the items included in the Bills of Quantities, is relatively high. To facilitate checking by the Procuring Entity of the realism of rates quoted by the Tenderers, the Day work Schedule should normally comprise:

a) a list of the various classes of labor, materials, and Contractor's Equipment for which basic Day work rates or prices are to be inserted by the Tenderer, together with a statement of the conditions under which the Contractor will be paid for work executed on a Day work basis; and

b) a percentage to be entered by the Tenderer against each basic Daywork Subtotal amount for labor, materials, and Plant representing the Contractor's profit, overheads, supervision, and other charges.

10. Provisional Quantities and Sums

10.1 Provision for quantity contingencies in any particular item or class of work with a high expectation of quantity overrun should be made by entering specific “Provisional Quantities” or “Provisional Items” in the Bills of Quantities, and *not* by increasing the quantities for that item or class of work beyond those of the work normally expected to be required. To the extent not covered above, a general provision for physical contingencies (quantity overruns) should be made by including a “Provisional Sum” in the Summary of the Bills of Quantities. Similarly, a contingency allowance for possible price increases should be provided as a “Provisional Sum” in the Summary of the Bills of Quantities. The inclusion of such Provisional Sums often facilitates budgetary approval by avoiding the need to request periodic supplementary approvals as the future need arises.

10.2 The estimated cost of specialized work to be carried out, or of special goods to be supplied, by a Nominated Subcontractor should be specified in the relevant part of the Bills of Quantities as a particular Provisional Sum with an appropriate brief description. A separate tendering procedure is normally carried out by the Procuring Entity to select the specialists, who are then nominated as subcontractors to the main or prime contractor. To provide an element of competition among the main Tenderers (or prime contractors) in respect of any facilities, amenities, attendance, etc., to be provided by the successful Tenderer as prime contractor for the use and convenience of the specialist or nominated subcontractor, each related Provisional Sum should be following by an item in the Bills of Quantities inviting a percentage (to be quoted by the main Tenderer) payable on the actual expenditure from the Provisional Sum.

11. Summary

The Summary should contain a tabulation of the separate parts of the Bills of Quantities carried forward, with provisional sums for Daywork, for physical (quantity) contingencies, and for price contingencies (upward price adjustment) where applicable.

12 Sample Bills of Quantities

A. Preamble

1. The Bills of Quantities shall be read in conjunction with the Instructions to Tenderers, General and Particular Conditions of Contract, Technical Specifications, and Drawings.

2. The quantities given in the Bills of Quantities are estimated and provisional, and are given to provide a common basis for tendering. The basis of payment will be the actual quantities of work ordered and carried out, as measured by the Contractor and verified by the Engineer and valued at the rates and prices tender in the priced Bills of Quantities, where applicable, and otherwise at such rates and prices as the Engineer may fix within the terms of the Contract.

3. The rates and prices tender in the priced Bills of Quantities shall, except in so far as it is otherwise provided under the Contract, include all Constructional Plant, labor, supervision, materials, erection, maintenance, insurance, profit, taxes, and duties, together with all general risks, liabilities, and obligations set out or implied in the Contract.

4. A rate or price shall be entered against each item in the priced Bills of Quantities, whether quantities are stated or not. The cost of Items against which the Contractor has failed to enter a rate or price shall be deemed to be covered by other rates and prices entered in the Bills of Quantities.

5. The whole cost of complying with the provisions of the Contract shall be included in the Items provided in the priced Bills of Quantities, and where no Items are provided, the cost shall be deemed to be distributed among the rates and prices entered for the related Items of Work.

6. General directions and descriptions of work and materials are not necessarily repeated nor summarized in the Bills of Quantities. References to the relevant sections of the Contract documentation shall be made before entering prices against each item in the priced Bills of Quantities.

7. Provisional Sums included and so designated in the Bills of Quantities shall be expended in whole or in part at the direction and discretion of the Engineer in accordance with Sub-Clause 13.5 and Clause 13.6 of the General Conditions.

8. The method of measurement of completed work for payment shall be in accordance with *[insert the name of a standard reference guide, or full details of the methods to be used]* [6].

B. Work Items

1. The Bills of Quantities usually contains the following part Bills, which have been grouped according to the nature or timing of the work:

Bill No. 1: General Items;
Bill No. 2: Earthworks;
Bill No. 3: Culverts and Bridges;
Bill No. 4: etc., as required;
Daywork Schedule; and
Summary Bills of Quantities.

[6] *The method of measurement should be spelled out precisely in the Preamble to the Bills of Quantities, describing for example the allowances (if any) for timbering in excavation, etc. Many national standard reference guides have been prepared on the subject, and one such guide is the Standard Method of Measurement of the U.K. Institution of Civil Engineers.*

2. If TDS-ITT 15.1 (a) applies, Tenderers shall price the Bills of Quantities in local currency only and shall indicate in the Appendix to Tender the percentage expected for payment in foreign currency or currencies. If TDS-ITT 15.1 (b) applies Tenderers shall price the Bills of Quantities in the applicable currency or currencies.

[Note to the Procuring Entity: The tables in BOQ must be prepared in accordance with the currency alternative retained in TDS – ITT 15.1.]

Bills of Quantities

Bill No. 1: General Items

Item no.	*Description*	*Unit*	*Quantity*	*Rate*	*Amount*
Total for Bill No. 1 (carried forward to Summary, p. _____)					_____

Payments under this item shall be made in the following currency proportions:

i) foreign: percent (to be stated by Tenderer)[7].

ii) local: percent (to be stated by Tenderer).

[7] *The Tenderer shall state the percentage in a common foreign currency equivalent required for payment and the exchange rates and official sources used.*

Bill No. 2: Work items *(organized appropriately into work sections, such as General Items, earth works, Culverts and Bridges, etc.) in tables as the one below.*

Bill No 2 - *(Name of Section E.g. Earthworks)*

Item no.	***Description***	***Unit***	***Quantity***	***Rate***	***Amount***
Total for Bill No…….. (Carried forward to Summary, p. _____)					xxx

Payments under this item shall be made in the following currency proportions:

i) Foreign:_____percent (to be stated by Tenderer)[8].

ii) Local:_____percent (to be stated by Tenderer).

[8]*The Tenderer shall state the percentage in a common foreign currency equivalent required for payment and the exchange rates and official sources used.*

C. Schedule of Daywork

Rates [Note to the Procuring

Entity:

i) A "Daywork Schedule" is commonly found in contracts where the likely incidence of unforeseen work cannot be covered by definitive descriptions and approximate quantities in the Bills of Quantities. The preferred alternative is to value the additional work in accordance with the Conditions of Contract. A Daywork Schedule normally has the disadvantage of not being competitive among Tenderers, who may therefore load the rates as signed to some or all the items. If a Daywork Schedule is to be included at all in the tendering documents, it is preferable to include nominal quantities against the items most likely to be used, and to carry the sum of the extended amounts forward into the Tender Summary in order to make the basic Schedule of Daywork Rates competitive.

ii) The total amount assigned to such competitive daywork is normally 3–5 percent of the estimated base Contract Price and is regarded as a Provisional Sum for contingencies to be expended under the direction and at the discretion of the Engineer.]

1. General

Reference should be made to Sub-Clause 13.6 of the General Conditions. Work shall not be executed on a day work basis except by written order of the Engineer. Tenderers shall enter basic rates for day work items in the Schedules, which rates shall apply to any quantity of day work ordered by the Engineer. Nominal quantities have been indicated against each item of daywork, and the extended total for Daywork shall be carried forward as a Provisional Sum to the Summary Total Tender Amount. Unless otherwise adjusted, payments for day work shall be subject to price adjustment in accordance with the provisions in the Conditions of Contract.

2. Daywork Labor

2.1 In calculating payments due to the Contract or for the execution of day work, the hours for labor will be reckoned from the time of arrival of the labor at the job site to execute the particular item of day work to the time of return to the original place of departure, but excluding meal breaks and rest periods. Only the time of classes of labor directly doing work ordered by the Engineer and for which they are competent to perform will be measured. The time of gangers (charge hands) actually doing work with the gangs will also be measured but not the time of foremen or other supervisory personnel.

2.2 The Contractor shall be entitled to payment in respect of the total time that labor is employed on daywork, calculated at the basic rates entered by the Contractor in the **Schedule of Daywork Rates: 1. Labor,** together with an additional percentage payment on basic rates representing the Contractor's profit, overheads, etc., as described below:

a) The basic rates for labor shall cover all direct costs to the Contractor, including (but not limited to) the number of wages paid to such labor, transportation time, overtime, subsistence allowances, and any sums paid to or on behalf of such labor for social benefits in accordance with *[country of Procuring Entity]* law. The basic rates will be payable in local currency only.

b) The additional percentage payment to be quoted by the Tenderer and applied to costs incurred under (a) above shall be deemed to cover the Contractor's profit, overheads, superintendence, liabilities, and insurances and allowances to labor, time keeping, and clerical and office work, the use of consumable stores, water, lighting, and power; the use and repair of stagings, scaffolding, workshops, and stores, portable power tools, manual plant, and tools; supervision by the Contractor's staff, foremen, and other supervisory personnel; and charges incidental to the fore going. Payments under this item shall be made in the following currency proportions:

i) Foreign:_____percent (to be stated by Tenderer)[9].

ii) Local:_____percent (to be stated by

Tenderer). [***Note to the Procuring Entity****:*

This method of indicating profit and overheads separately facilitates the addition of further items of daywork, if needed, the basic costs of which can then be checked more easily. An alternative is to make Daywork rates all- inclusive of the Contractor's overhead and profit, etc., in which case this paragraph and the relevant Daywork Schedule should be modified accordingly.]

3. Daywork Materials

The Contractor shall be entitled to payment in respect of materials used for daywork (except for materials for which the cost is included in the percentage addition to labor costs as detailed hereto fore), at the basic rates entered by the Contractor in the **Schedule of Daywork Rates: 2. Materials,** together with an additional percentage payment on the basic rates to cover overhead charges and profit, as follows:

a) the basic rates for materials shall be calculated on the basis of the invoiced price, freight, insurance, handling expenses, damage, losses, etc., and shall provide for delivery to store for stockpiling at the Site. The basic rates shall be stated in local currency, but payment will be made in the currency or currencies expended upon presentation of supporting documentation.

b) the additional percentage payment shall be quoted by the Tenderer and applied to the equivalent local currency payments made under (a) above. Payments under this item will be made in the following currency proportions:
   i) foreign:____percent (to be stated by the Tenderer)[10];
   ii) local:_____percent (to be stated by the Tenderer);

c) the cost of hauling materials for use on work ordered to be carried out as daywork from the store or stockpile on the Site to the place where it is to be used will be paid in accordance with the terms for Labor and Construction in this schedule.

4. Daywork Contractor's Equipment

4.1 The Contractor shall be entitled to payments in respect of Contractor's Equipment already on Site and employed on daywork at the basic rental rates entered by the Contractor in the **Schedule of Daywork Rates: 3. Contractor's Equipment.** Said rates shall be deemed to include due and complete allowance for depreciation, interest, indemnity, and insurance, repairs, maintenance, supplies, fuel, lubricants, and other consumables, and all overhead, profit, and administrative costs related to the use of such equipment.

[***Note to the Procuring Entity****: This is an example of wording to include overhead and profit, etc., in the daywork rates. A separate percentage addition could be used as for labor and materials*.] The cost of drivers, operators, and assistants will be paid for separately as described under the section on Daywork Labor. *[**Note to the Procuring Entity**: An alternative, sometimes adopted for administrative convenience, is to include the cost of drivers, operators, and assistants in the basic rates for Contractor's Equipment. The last sentence of this paragraph 5 should then be modified accordingly.]*

4.2 In calculating the payment due to the Contractor for Contractor's Equipment employed on daywork, only the actual number of working hours will be eligible for payment, except that where applicable and agreed with the Engineer, the traveling time from the part of the Site where the Contractor's Equipment was located when ordered by the Engineer to be employed on daywork and the time for return journey thereto shall be included for payment.

4.3 The basic rental rates for Contractor's Equipment employed on daywork shall be stated in local currency, but payments to the Contractor will be made in currency proportions, as follows:
   a) Foreign:_____percent (to be stated by the Tenderer)[11].
   b) Local:_____percent (to be stated by the Tenderer).

[9]*The Tenderer shall state the percentage in a common foreign currency equivalent required for payment and the exchange rates and official sources used.* [10]*The Tenderer shall state the percentage in a single foreign currency equivalent and the exchange rates and official sources used.*
[11]*The Tenderer shall state the percentage in a single foreign currency equivalent and the exchange rates and official sources used.*

Schedule of Daywork Rates: 1. Labor

Item no.	*Description*	*Unit*	*Nominal quantity*	*Rate*	*Extended amount*
	Subtotal				
	Allow ____ percent of Subtotal for Contractor's overhead, profit, etc., in accordance with paragraph 3 (b) above.				
	Total for Daywork: Labor (Carried forward to Daywork Summary, p. _____)				_____

a. To be entered by the Tenderer.

Schedule of Daywork Rates: 2. Materials

Item no.	*Description*	*Unit*	*Nominal quantity*	*Rate*	*Extended amount*
	Subtotal				
	Allow ____ percent of Subtotal for Contractor's overhead, profit, etc., in accordance with paragraph 4 (b) above.				
	Total for Daywork: Materials (Carried forward to Daywork Summary, p. _____)				_____

a. To be entered by the Tenderer.

Schedule of Daywork Rates: 3. Contractor's Equipment

Item no.	*Description*	*Nominal quantity (hours)*	*Basic hourly rental rate*	*Extended amount*
	Allow _ percent of Subtotal for Contractor's overhead, profit, etc., in accordance with paragraph 5 above.			
Total for Daywork: Contractor's Equipment (Carried forward to Daywork Summary, p. _____)				_____

a. To be entered by the Tenderer.

Dayworks Summary

	Amount ( )	*% Foreign*
1. Total for Daywork: Labor		
2. Total for Daywork: Materials		
3. Total for Daywork: Contractor's Equipment		
Total for Daywork (Provisional Sum) (Carried forward to Tender Summary, p. ___)	_____	_____

a. The Procuring Entity should insert local currency unit.

Summary of Specified Provisional Sums in the Bills of Quantities

Bill no.	*Item no.*	*Description*	*Amount*
1			
2			
3			
4			
etc.			
Total for Specified Provisional Sums (Carried forward to Grand Summary (B), p. _____)			

Grand Summary

General Summary	**Page**	**Amount**
Bill No. 1: Genera items		
Bill No. 2: Work items		
Bill No. 2: Work items		
Bill No. 2: Work items		
Bill No. 2: Work items, —etc.—		
Subtotal of Bills	(A)	
ADD Total for Daywork (Provisional Sum) *	(B)	
ADD Specified Provisional Sums in their subtotal of bills	(C)	[sum]
Total of Bills Plus Provisional Sums (A + B + C) [i]	(D)	
Add Provisional Sum for Contingency Allowance (if any) [ii]	(E)	[sum]
Tender Price (D + E) (Carried forward to Letter of Tender)	(F)	

i) All Provisional Sums are to be expended in whole or in part at the direction and discretion of the Engineer in accordance with +Clause 13.5 of the General Conditions.
ii) To be entered by the Procuring Entity.
* For evaluation purposes, Provisional Sum, other than Daywork will be excluded

SECTION VI - SPECIFICATIONS

A. LOCATION OF PROJECT

The road project is located in Ngomeni Ward in Mwingi North Sub-County in Kitui County. The project site is in along Nguni-kalwa Road.

B. EXTENT OF CONTRACT.

The works to be executed under this Contract comprise the following:

- Supervision
- Publicity Sign Board
- Drift construction
- Approach slab construction
  Protection works

A. PROGRAMME OF EXECUTION OF THE WORKS

The Contractor shall provide the works programme, required under the Conditions of Contract, within 14 days of receipt of the Engineer's Order to commence work.

The programme shall be co-ordinated with climatic and other conditions to provide for the completion of the works in the order and by the time specified.

The Contractor shall carry out the contract in accordance with the programme agreed with the Engineer. Still, he shall in no manner be relieved by the Engineer's approval of the programme, of his obligation to complete the works in the prescribed order and by the prescribed completion date. He shall from time to time review his progress and make such amendments to his rate of execution of the works as may be necessary to fulfil his obligations.

A. *ORDER OF EXECUTION OF WORKS*

The Contractor shall carry out the Works such that a continuous and consecutive output of fully completed work is achieved.

B. *TAKING OVER CERTIFICATE*

Taking over certificate shall be issued upon completion of the works**.**

BILL 01: PRELIMINARY AND GENERAL ITEMS

Scope:

This bill comprises those items that are required at the Commencement and Completion of the Works or that are Provisional Items applicable for the duration of the Works.

01-50- 001 Mobilization and Establishment of the Site

The Contractor shall provide all equipment, tools, materials, temporary offices, stores and housing required to carry out the Works.
The Contractor shall ensure that all possible means of protection are given to the labour force at all times. Such protection shall include provision of high visibility clothing or vests, goggles and masks for workers in potentially dangerous locations or dealing with potentially harmful materials. The Contractor shall also maintain first aid kits with a minimum of the following items:-

- Non-Stick wound dressing
- Selection of plaster/band aids
- Crepe bandages
- Gauze and cotton wool
- Antiseptic solution (washing wounds)
- Antiseptic cream – Betadine, Burnol
- Pain killers Panadol, Disprin
- Anti diarrhoea – Immodium, Diadis, Charcoal
- Anti histamine – Piriton, Triludan
- Anti nausea – Stemetil
- Eye ointment

- Oral re-hydration sachets
- Surgical gloves Measurement and Payment: NA

01-60- 001 Contract Supervision

Provisional sum available for the Engineer for expenses incurred for supervising the contract such as allowances, casual wages and transportation within the project area.
Measurement and Payment:
Provisional Sum: Payable by the Contractor to the Engineer through certification as directed by the Engineer. No mark up is included in this item.
Work Method: NA

01-60- 002 Clearance on Completion

On Completion of the Works, all temporary housing, equipment, signs and tools shall be removed from the site, and the site left in good order to the satisfaction of the Engineer.

Measurement and Payment

The Lump Sum payment will be made upon approval by the Engineer that the Clearance has been satisfactorily carried out.

Work Method: NA

01-60-03 Insurance

The Contractor shall provide Insurance in accordance with the Conditions of Contract as indicated in the Appendix to form of tender and Clause 14.1 for small works conditions of contract.

Measurement and Payment

Lump Sum payment for this item will be made upon the production of satisfactory evidence by the Contractor that Insurances have been affected.

Work Method: NA

01-60-04 Quality Control Tests

The Engineer may instruct the Contractor during the progress of the Works to carry out quality control tests to check materials and standards of workmanship, against the Specifications.

Where such tests indicate defective standards, the Engineer shall instruct the Contractor to rectify the defects to the Engineer's satisfaction and at the Contractor's expense.
The Engineer shall include a Provisional Sum for this item to be expended only as and when the Contractor is instructed to carry out tests at approved material testing laboratories.
Measurement and Payment
Reimbursable item based on actual costs incurred by the contractor including sampling, transportation and testing.

Work Method: NA

01-60-05 Publicity Sign Boards

The Contractor shall provide Sign Boards as specified on the Drawings or as directed by the Engineer. The Sign Boards shall be placed at the beginning and end of the road or road bill covered by this Contract.

Sign Boards shall be maintained for the duration of the Works, and removed on completion. Quality Control
The Engineer shall check that Sign Boards have been erected in accordance with Drawings and Specifications.

Measurement: Number

The unit of measurement shall be number of Sign Boards erected Payment
The unit rate shall be the full compensation for labour, tools, materials and incidental costs required for carrying out the work.

Work Method: NA

01-60- 006 Drinking Water

The Contractor shall provide safe drinking water on site for workers at a reasonable distance from all work locations, for the duration of the Works.

Quality Control

The Engineer shall check regularly that adequate supplies of water are available throughout the Site. Measurement and Payment
A Lump Sum shall be paid on a Monthly basis upon the approval of the Engineer that adequate supplies have been provided.

Work Method: **LB**

01-60-007 Provision of site sanitation facilities

The Contractor shall provide sanitation facilities on site for workers at a reasonable distance from all work locations, for the duration of the Works. This can be in the form of shallow pit latrines that are appropriately covered. All shallow pit latrines shall be filled in after the end of use.

Quality Control
The Engineer shall check regularly that adequate sanitation facilities are available throughout the Site. Measurement and Payment
A Lump Sum shall be paid on a Monthly basis upon the approval of the Engineer that adequate sanitation facilities have been provided.

Work Method: **LB**

BILL 03: SETTING OUT

Scope

This bill covers the activities required in the re-establishment of the horizontal alignment of the road including setting out the centre line, cross section widths, drains and structures.
03-50-001: Setting Out the Horizontal Alignment
The Contractor shall set out the centreline to follow the existing road alignment unless instructed otherwise by the Engineer.

The minimum standards as shown in Table 2.1 shall apply. Table 2.1 Alignment Standards

Standard	Flat and Rolling Terrain	Hilly Terrain
Horizontal Curves		
Desirable Minimum radius	100m	50m

The cross-section details of the road shall be as shown on the Drawing or as directed by the Engineer. Horizontal setting out shall be done for the approved work sections at a time but not for the entire road.

Work Method: **LB**

Quality Control
Centreline pegs shall be set at 10m intervals on straight sections and 5m on curves
Chainage or reference pegs shall be set out and marked at 20m intervals and located at one metre outside the cleared width and on both sides of the road.
Cross section widths shall be checked at 10m intervals and shall have maximum tolerances of + 25mm
Measurement Unit: m
The measurement shall be the linear metres of the road set out.

Payment:

The unit rate shall be the full compensation for labour, tools, materials and incidental costs required for carrying out the work.

BILL 04: SITE CLEARANCE
Scope
This bill covers the clearance of bushes, shrubs, grasses, trees, stumps, boulders, stripping and grubbing of the topsoil, removal of anthills and other unsuitable materials for the specified widths of the road, quarry and borrow areas. The Engineer shall decide the distinction between light and heavy bush clearing.

The minimum site clearing widths for each of the activities shall be as shown in Table 4.1 Table 4.1: **Site Clearing Widths**

Road Category	*Running Surface*	*Site clearance (Bush clearing, tree cutting)*

D/E	6 m	12.0m
F/G	6m	9.0m
UCR	5m	7.0m

04-50-02 Grass Cutting

Grass shall be defined as any form of plant growth including small shrubs having a girth of not more than 100mm measured at height of 200mm above ground level.

The grass shall be cut to height of not more than 50 mm above the ground. The width limits shall be as instructed by the Engineer. All cut grass shall be removed from the carriageway, side drains, mitre drains and inlets and outlet drains of structures/culverts and deposited in approved spoil dumps

Burning of the grass shall not be allowed and care shall be taken not to damage roadside fixtures such as signs and marker posts.

This activity shall be carried out as either Machine Based (Mechanical Mowing) or as Labour Based as defined in the Bills of Quantity or as instructed by the Engineer.

Grass cutting shall be done off-carriageway and shall not include areas designated for grubbing. Work Method: **LB or MB**
Quality Control
The road width for grass cutting shall be measured at 50-m intervals and shall be free of grass after the operation.

Measurement: m^2

The measurement shall be area of grass cut, based on the standard width and measured length of clearing.

Payment

The unit rate shall be full compensation, for equipment, labour, materials, tools, and incidental costs required to carry out the work.

04-50-03 Bush Clearing (Heavy)

Where the Engineer designates an area as Heavy Bush (based on the undergrowth density) the Contractor shall clear all vegetation including small trees, shrubs and undergrowth, **and their root systems**, and shall salvage any re-useable timber or other material by cutting into logs and stacking. Other cleared material shall be collected and disposed of off-site as directed by the Engineer.

This activity shall be carried out as either Machine Based or as Labour Based as defined in the Bills of Quantity or as instructed by the Engineer.

Work Method: **LB or MB**

Quality Control

The Engineer shall check the cleared widths at 50 metre intervals Measurement Unit: m2
The measurement shall be the area cleared to the specified width over the length as instructed by the Engineer.
Payment:

The unit rate shall be the full compensation for all labour, tools, equipment and incidental costs required to complete the work.

04-50-04 Bush Clearing (Light)

The Contractor shall clear all vegetation including small trees, and shrubs with their root systems. Grasses and any undergrowth shall be cut to a height of not more than 100mm. The cleared material shall be collected and disposed of away from the side drains and in a manner that causes no visibility obstruction to traffic.

This activity shall be carried out as either Machine Based or as Labour Based as defined in the Bills of Quantity or as instructed by the Engineer.

Work Method: **LB or MB**

Quality Control

The Engineer shall check the cleared widths at 50 metre intervals. Measurement Unit: m2
The measurement shall be the area cleared to the specified width over the length as instructed by the Engineer.
Payment:

The unit rate shall be the full compensation for all labour, tools and incidental costs required to complete the work.

04-50-05 Pruning Tree Branches

Where instructed by the Engineer, the Contractor shall trim tree branches to improve visibility. Cut material shall be collected and disposed of as directed by the Engineer and burning of waste material shall not be permitted.
Work Method: **LB**
Quality Control
The Engineer shall check for visibility improvement. Measurement and Payment
A Provisional Sum shall be allowed for this item, which shall be paid under Day works.

04-50-06 Trees and Stumps Removal (200-450mm girth)

Trees and Stumps outside the construction width but within the road reserve having a trunk girth of between 200-450mm at a point 600mm above the ground shall only be removed on the instruction of the Engineer.

The Contractor shall excavate around any trees to be removed to a depth not less than 0.5 m before cutting the roots. Existing stumps shall be uprooted in the same manner. All holes left by the removal of trees and stumps shall be back-filled with approved material and compacted to existing ground level. Cut material and stumps shall be collected and disposed of as directed by the Engineer. Burning of waste material shall not be permitted.

Work Method: **LB**

Quality Control

The Engineer shall approve the removal, backfilling and satisfactory disposal of all waste material. Measurement Unit: No
The measurement shall be the number of trees and stumps removed. Payment
The unit rate shall be the full compensation for all labour, tools and incidental costs required to complete this item.

04-50-07 Trees and Stump Removal (>450mm girth)

All the requirements of item 04-50-003 shall apply for trees and stumps greater than 450mm girth. In addition any re-useable timber from trees removed shall be cut into logs not more than 1.5 metres long and stacked as directed by the Engineer.
Work Method: **LB**

Quality Control

The Engineer shall approve the removal, backfilling and satisfactory disposal of all waste material.

Measurement Unit: No

Measurement shall be the number of trees and stumps removed Payment:
The unit rate shall be the full compensation for all labour, tools, equipment and incidental costs required to complete this item.

04-50-08 Clearing Obstructions – Boulders and debris removal

The Contractor shall remove in a manner agreed by the Engineer, rocks and boulders greater than 1.5 m girth using labour, appropriate equipment and blasting as necessary. Boulders shall be disposed off outside the road area.

Blasting should only be done on instruction by the Engineer and only carried out by licensed individuals/firms.

Debris removal shall include:

Inspection of the road section(s) regularly
Removal of all obstructions such as fallen trees/ branches, rock fall, landslides and broken signs away from the road, side drains, mitre drains and other drains, inlets and outlets of drifts, culverts and other structures and the safe disposal thereof outside the road formation width.
Removal of dead animals' carcasses away for the carriageway and disposing of them as directed by the Engineer. Liaison with the Police may be necessary.
This activity shall be carried out as Machine Based, Labour Based or a mixture of the two as defined in the Bills of Quantity or as instructed by the Engineer.

Work Method: **LB, MB, LB-MB**

Quality Control

The Engineer shall approve the removal and satisfactory disposal of the boulders / debris. The road section shall be free of any obstruction.

Measurement Unit: Provisional Sum

A Provisional Sum shall be included for this item Payment:
Payment shall be made on a Day works basis.

04-50-09 Stripping and Grubbing

The Contractor shall remove, over the widths shown in Table 4.1, topsoil including grass, anthills, loose boulders up to 1.5m girth and other unsuitable material and deposit the debris outside the cleared area as directed by the Engineer.
Work Method: **LB**

Quality Control

The Engineer shall approve the stripped and grubbed area and the satisfactory disposal of waste material. Measurement Unit m2
The measurement shall be the area grubbed as directed by the Engineer Payment
The unit rate shall be the full compensation for all labour, tools and incidental expenses required to complete this item.

04-50-10 Excavate, remove and disposal of concrete structures

The Contractor shall excavate, remove and dispose of concrete structures as directed by the Engineer.

This activity shall be carried out either as Machine Based, Labour Based or a mixture of the two as defined in the Bills of Quantity or as instructed by the Engineer.

Work Method: **LB, MB, LB-MB**

Quality Control

The Engineer shall approve the area where the structure was removed from and the satisfactory disposal of the concrete structures.
A Provisional Sum shall be included for this item Payment: Provisional Sum
Payment shall be made on a Day works basis. Measurement Unit: Provisional Sum

BILL 05: EARTHWORKS

This bill covers the excavation of soil and the placing, watering and compaction of hard and soft material to form the road formation.

05-50-01 : Establishment of the Vertical Alignment - Slotting

The Contractor shall re-establish the vertical alignment of the road section which includes the setting out and excavation of horizontal slots marking the level road platform.

The width of the slots shall be 0.5 m and they shall be set out at 10m intervals along the straight section and 5m on the curve sections of the road. Each slot shall be compacted using hand rammers until no more imprints of the rammer on the surface of the slot can be seen. The length of each slot shall be equal to the formation width of the road.

Vertical alignment standards shall be those set out in Table 5.1 Table

5.1 Vertical Alignment Standards

Standard	Flat & Rolling Terrain	Hilly Terrain
Gradients		
Desirable Minimum Desirable Maximum Absolute Maximum	2% 8% 10%	2% 10% 12%

The Contractor shall use **Labour** to carry out this item of work. Work method: **LB**
Quality Control:

The hand rammer shall be not less than 5kg
The level of the slot shall have a tolerance of + 50 mm
The longitudinal profile of the road shall be checked at every third slot and shall have a maximum tolerance of + 50mm

Measurement Unit: m
The measurement shall be linear metres of road alignment set out Payment:

The unit rate shall be the full compensation for labour, tools, materials and incidental costs required for carrying out the work.

05-50-02 : Excavation, spread and compact in soft material (side drains)

The Contractor shall excavate side drains to the profiles shown on the Drawings or as directed by the Engineer.

Soft material in this case is defined as any material which is not hard or rock in which the average output is more than 1.5 m3 per PD.

The material from the excavations shall be placed on the carriageway, spread and compacted. Where additional material is required to achieve the required camber, the widths of the side drains may be increased, with the approval of the Engineer.

The fill layers to be compacted shall not exceed 150mm loose depth.

Compaction of the fill material shall be carried out from the edges to the centre by overlapping passes of the compaction equipment. The number of passes shall be as directed by the Engineer dependent upon the equipment used and the material being compacted. Unless otherwise instructed the moisture content of the material shall be within + 2% of optimum. Where additional moisture is required, water shall be applied in an even manner such that no longitudinal or transverse flow occurs.

Locations of the side drains shall be as shown on the Drawings or as directed by the Engineer, and the Contractor shall use the appropriate ditch template to control the excavations

The Contractor shall use **Labour** and appropriate compaction **Equipment** to carry out this item of work Work method: **LB – MB**

Quality Control

- The dimensions of the side drains shall be checked at 50m intervals and shall have a tolerance of + 50mm
- The longitudinal profile of the side drains shall be checked at 30m intervals and shall have a tolerance of +50mm.
- *Compaction shall show no movement of material under the roller – minimum of 6 passes.*
- *Compaction test standard shall be 95% MDD (AASHTO T99)*

Measurement Unit m3

Measurement shall be the volume of material excavated to form the side drains, and deposited for camber formation.

Payment

The unit rate shall be the full compensation for labour, tools and incidental costs required for carrying out the work.

05-50-03 Excavation, spread and compact in hard material (side drains)

Where, in the opinion of the Engineer, the material to be excavated to form the side drains may be classified as hard (not rock) the Contractor shall carry out the excavation in accordance with 04-50-003 and shall be compensated under this item. Hard material in this case is defined as hard gravel, dry black cotton soil, soil with high percentage of stones or other material in which the output is less than 1.5 m3 per PD.
This activity shall be carried out either as Machine Based, Labour Based or a mixture of the two as defined in the Bills of Quantity or as instructed by the Engineer.

Work Method: **LB, MB, LB-MB**

Quality Control:

The Engineer shall measure the volume of the excavation classified as Hard material
Measurement Unit: m3
The measurement shall be the volume of material excavated and deposited to form the camber Payment:
The unit rate shall be the full compensation for all labour, tools, equipment and incidental costs required to complete the work.

05-50-04 Excavation to Level and Compaction

The Contractor shall cut material to form the level road platform and place the excavated material as fill or in spoil areas approved by the Engineer. Where material needs to be borrowed excavation shall only be from borrow areas approved by the Engineer.

The fill layers to be compacted shall not exceed 150mm loose depth.
Compaction of the fill material shall be carried out from the edges to the centre by overlapping passes of the compaction equipment. The number of passes shall be as directed by the Engineer dependent upon the equipment used and the material being compacted. Unless otherwise instructed the moisture content of the material shall be within + 2% of optimum. Where additional moisture is required water shall be applied in an even manner such that no longitudinal or transverse flow occurs.

The Engineer may instruct the Contractor to carry out density tests on the compacted material to ensure that an acceptable standard has been achieved.

The Contractor shall use Labour and appropriate compaction Equipment to carry out this item of work. Work Method: **LB - MB**

Quality Control

- The width of the platform shall be checked at intervals of 50 m and shall have a tolerance of +50mm.
- *The level platform shall be horizontal in the transverse direction and shall have a tolerance of +15 mm under a 2 metre straight edge.*
- *The longitudinal profile shall have a maximum tolerance of +50 mm over a 30m length of gradient.*
- *Compaction shall show no movement of material under the roller – minimum of 6 passes.*
- *Compaction test standard shall be 95% MDD (AASHTO T99)*

Measurement Unit: m3

The measurement shall be the volume of compacted fill material forming the level platform. Payment
The unit rate shall be the full compensation for labour, tools, equipment, water and incidental costs required for carrying out the work.

05-50-05 Spreading and Compaction for Camber Formation

The Contractor shall spread and compact the material deposited from the side drains to form the camber on the road, in accordance with the Drawings or as directed by the Engineer, and shall check the profile with the appropriate camber board.

Compaction shall be carried out from the edges to the centre line by overlapping passes of the compaction equipment. The number of passes shall be as directed by the Engineer dependent upon the equipment used and the material being compacted. Unless otherwise instructed the moisture content of the material shall be within + 2% of optimum. Where additional moisture is required water shall be applied in an even manner such that no longitudinal or transverse flow occurs.
The Engineer may instruct the Contractor to carry out density tests on the compacted material to ensure that an acceptable standard has been achieved.

The Contractor shall use **Labour** and appropriate compaction **Equipment** to carry out this item. Work method: LB-MB

Quality Control

- The width of the carriageway including the shoulders shall be checked at 50m intervals and shall have a tolerance of +50/-20 mm.
- The camber shall be checked 50m intervals and shall have a tolerance of + 1%.
- Longitudinal levels shall be checked with a straight edge of minimum 2.7 m length. Maximum tolerance of +10 mm.
- Compaction shall show no movement of material under the roller, minimum of 6 passes.
- Compaction test standard shall be 95% MDD (AASHTO T99)

Measurement Unit m2

The measurement shall be the area of camber formed, according to the specified carriageway width and measured length of road.

Payment
The unit rate shall be the full compensation for all labour, tools, equipment, water and incidental costs required for carrying out the work.

05-50-06 Fill in soft material and compact. 05-50-007 Fill in hard material and compact. 05-50-008 Cut to spoil in soft material.
05-50-009 Cut to spoil in hard material. 05-50-010 Cut to fill in soft material.
05-50-011 Cut to fill in hard material. 05-50-012 Rock to fill to swamp
05-50-013 Filter to swamp under, over and around rock fill

These activities should be done in accordance with Bill 5, sub clauses 5.01 to 5.17 in the Standard Specifications for Roads and Bridges 1986.

05-50-14 Grassing

The Contractor shall plant sprigs of approved indigenous 'runner' type grass. The Contractor shall care for and water the grass until it is firmly established.
The Contractor shall use Labour to carry out this item of work. Work Method: **LB**
Quality Control

The quality of grass and spacing of the sprigs shall be as directed by the Engineer Measurement Unit m²
The unit of measurement shall be area calculated as the net area, measured on the slope. Payment
The unit rate shall be full compensation, for labour, materials, tools, water and incidental costs required to carry out the work.

05-50-15 Back slope / Slope maintenance

This activity involves the protection / repair of erosion on embankment slopes, cut faces, shoulders, and side slopes by filling with suitable soils and compacting using appropriate tamping tools as instructed by the Engineer.
The Contractor shall use Labour to carry out this item of work. Work Method: **LB**
Quality Control

The width of the slope shall be measured at 50m intervals and shall have maximum tolerances of +100mm.

Measurement Unit m^2

The unit of measurement shall be area calculated as the net area, measured on the slope. Payment
The unit rate shall be full compensation, for labour, materials, tools and incidental costs required to carry out the work.

BILL 07: EXCAVATION AND FILLING FOR STRUCTURES

This bill covers all Works in connection with the excavation for concrete pipe culverts; inlet and outlet structures; drifts and drainage protection Works;

07-50-01 Excavation for Drainage Structures – Soft Material

The Contractor shall excavate trenches for culverts; foundations for head walls, wing walls; inlet and outlet aprons and other drainage structures to the dimensions and levels shown on the Drawings or as directed by the Engineer. The excavations shall be kept free of water and shall be compacted with hand rammers of not less than 5kg.
The Engineer shall approve all excavations before the Contractor shall be permitted to proceed with the construction.
The Contractor shall take all necessary precautions to safeguard the stability and safety of the excavations.

The Contractor shall apply Labour methods to carry out this item Work Method **LB**
Quality Control

- The dimensions of the excavations shall have a tolerance of +50mm
- The invert levels shall have a tolerance of +50mm
- The trench bottom gradients shall have a tolerance of +20mm over the length of the trench Measurement Unit m3

The measurement shall be volume of material excavated measured net according to the Drawings. Payment
The unit rate shall be the full compensation for labour, tools, and any incidental costs required for carrying out the work.

07-50-02 Excavation for Drainage Structures – Hard Material

Where, in the opinion of the Engineer, the material to be excavated to form the side drains and other drainage structures may be classified as hard (not rock) the Contractor shall carry out the excavation in accordance with 07-50-001 and shall be compensated under this item.

Hard material in this case is defined as hard gravel, dry black cotton soil, soil with high percentage of

stones or other material in which the output is less than 1.5 m3 per PD.

This activity shall be carried out either as Machine Based, Labour Based or a mixture of the two as defined in the Bills of Quantity or as instructed by the Engineer.

Work Method: **LB, MB, LB-MB**
Quality Control:
The Engineer shall measure the volume of the excavation classified as hard material Measurement Unit: m3
The measurement shall be the volume of material excavated and deposited. Payment:
The unit rate shall be the full compensation for all labour, tools, equipment and incidental costs required to complete the work.

07-50-03 River training in soft material 07-50-004 River diversion
07-50-05 Porous filter material
07-50-06 Selected granular fill material 07-50-007 Cut to fill in soft material

These activities should be done in accordance with Bill 7, sub clauses 7.01 to 7.13 in the Standard Specifications for Roads and Bridges 1986.

BILL 08: CULVERT AND DRAINAGE WORKS

This bill covers all Works in connection with the installation of concrete pipe culverts; inlet and outlet structures; drifts and drainage protection Works; and the construction of Scour Checks

08-50-02 : Ditch Cleaning

i. Partially silted

Partially silted drains are those that are less than half silted and require only cleaning.

All deposited material, debris, and vegetation shall be removed and the drain shaped to the original cross section and left in a free-draining condition. Suitable material may be used to fill depressions and potholes on the carriageway. All debris and other unsuitable material removed from the side drains shall be disposed of well clear of the drainage system in approved spoil dumps where it will not cause any obstruction or be washed back.

The side drains, mitre drains and catch water drains shall be cleaned before the onset of the rains or as directed by the Engineer.

This activity shall be carried out either as Machine Based, Labour Based or a mixture of the two as defined in the Bills of Quantity or as instructed by the Engineer.
Work Method: **LB, MB, LB-MB**
Quality Control

- Appropriate drain templates shall be used to check and control the dimensions of the drains.

- The longitudinal profile of the drains shall be checked using boning rods, to ensure free flow.

Measurement Unit: m

The measurement shall be the length of drain desilted or cleaned to the specified cross section. Payment
The unit rate shall be full compensation, for labour, tools, and incidental costs required to carry out the work.

ii. Fully silted

Fully silted drains shall be those that are greater than half-silted and require re-excavation or reshaping.

All deposited material, debris, and vegetation shall be removed and the drain shaped to the original cross section and left in a free-draining condition. Suitable material may be used to fill depressions and potholes on the carriageway. All debris and other unsuitable material removed from the side drains shall be disposed of well clear of the drainage system in approved spoil dumps where it will not cause any obstruction or be washed back.

The side drains shall be desilted or re-excavated before the onset of the rains, or as directed by the Engineer.

This activity shall be carried out either as Machine Based, Labour Based or a mixture of the two as defined in the Bills of Quantity or as instructed by the Engineer.

Work Method: **LB, MB, LB-MB**

Quality Control

- Appropriate drain templates shall be used to check and control the dimensions of the drains.
- The longitudinal profile of the drains shall be checked using boning rods, to ensure free flow.

Measurement Unit: m

The measurement shall be the length of drain re-excavated or re-shaped to the specified cross-section. Payment
The unit rate shall be full compensation for equipment, labour, tools, and any incidental costs required to carry out the work.

08-50-03 : Ditch Works earth fills.

This activity involves the reinstatement/protection works of culvert outlets by filling the resultant eroded ditch gullies with specified suitable soft material to ensure free passage of water at all times without causing further damage. The ditch shall be excavated to firm ground and shaped to the required suitable shape (depth, width, levelled and smoothened) to the satisfaction of the engineer prior to filling. The fill material shall be deposited in layers as directed by the Engineer.

The filling shall be carried with approved soft material and compacted in layers not exceeding 150 mm loose depth or in thickness that shall not exceed the maximum that the equipment and method of operation can process to meet the required compaction as directed by the Engineer.

The Contractor shall first reshape the eroded ditch gullies to suitable shapes for working, remove any unsuitable materials, supply, dump, spread and process and compact in accordance with Section 508 of the Standard Specifications or as instructed by the engineer.

Work Method: **LB-MB**
Quality Control:
The Engineer shall approve the borrow materials, measure the volume of the borrow fill materials, the compaction achieved of each layer and the gradient of the out fall to avoid further erosion.
Measurement Unit: m3
The measurement shall be the volume of the fill material excavated, transported and deposited to fill the ditch gullies.

Payment:

The unit rate shall be the full compensation for all labour, materials, tools, equipment and incidental costs required to complete the work.

08-50-04 : Ditch Works rock fills. Supply and fill

This activity involves the reinstatement/protection works of culvert outlets by filling the resultant eroded ditch gullies with specified suitable hard material to ensure free passage of water at all times without causing further damage. The ditch shall be excavated to firm ground and shaped to the required suitable shape (depth, width, levelled and smoothened) to the satisfaction of the engineer prior to filling. The fill material shall be deposited in layers as directed by the Engineer.

The filling shall be carried with approved hard material and compacted in layers not exceeding 150 mm loose depth and systematically compacted by at least 8 passes of a towed vibrating roller weighing not less than 5 tonnes dead weight or in thickness that shall not exceed the maximum that the equipment and method of operation can process to meet the required compaction as directed by the Engineer. During compaction the surface of the layer shall be watered as necessary to facilitate the filling of the voids with the blinding material.

The Contractor shall first reshape the eroded ditch gullies to suitable shapes for working, remove any unsuitable materials, supply, dump, spread and process and compact in accordance with Section 508 of the Standard Specifications or as instructed by the engineer.

Work Method: **LB-MB**

Quality Control:

The Engineer shall approve and measure the volume of the hard materials, the compaction achieved of each layer and the gradient of the out fall to avoid further erosion.

Measurement Unit: m3

The measurement shall be the volume of the hard material excavated, transported and deposited to fill the ditch gullies to the desired level.

Payment:

The unit rate shall be the full compensation for all labour, materials, tools, equipment and incidental costs required to complete the work.

08-50-05 : Ditch/Mitre Drains/Catch water Drains

The Contractor shall excavate side drains, mitre drains and catch water drains to the dimensions shown on the Drawings and at locations as directed by the Engineer. They shall be excavated in a manner to minimise erosion at the discharge point. The material excavated from the drains shall be used to form the side drain bund directing water to the mitre-drain, and a bund on the lower side of the cut-off drain, or used for forming camber or disposed of as directed by the Engineer.

This activity shall be carried out either as Machine Based, Labour Based or a mixture of the two as defined in the Bills of Quantity or as instructed by the Engineer.
Work Method: LB, MB, LB-MB Quality Control

- The longitudinal profile shall have a gradient of maximum 4%.
- The dimensions of the drains shall have maximum tolerances of +20mm
- The location of the drains shall be approved by the Engineer.

Measurement Unit: m3

The measurement shall be the volume of material excavated as measured on site in approved drains. Payment
The unit rate shall be full compensation for labour, tools, equipment and incidental costs required for carrying out the work.

08-60-01 /005: Culvert Cleaning (partially blocked)
08-60-02 600mm dia
08-60-03 900mm dia
08-60-04 1200 mm dia

This activity involves the cleaning of culverts of specified sizes including pipe barrels, the outlet/inlet structures, and the outlet drains, keeping them free of all debris, weed, silt and any obstruction to ensure free passage of water at all times. The debris shall be deposited in approved spoil dumps as directed by the Engineer

Partially blocked culverts shall be those with less than half of the barrel blocked.

Correct widths and slopes of the outlet drains shall be maintained. The gradient of the outlet drain shall be not less than 2 %.

All broken culvert barrels discovered in the course carrying out this activity shall be reported to the Engineer.

This activity shall be carried out before the rains, or as directed by the Engineer. The Contractor shall use **Labour** to carry out this item of work
Work Method: **LB**

Quality Control

The culverts shall be checked as free of debris to the satisfaction of the Engineer. Measurement Unit: m
The measurement shall be the length of culvert, including the outlet drain, cleaned Payment
The unit rate shall be full compensation for **labour,** tools and incidental costs required to carry out the work.

08-60-05 /7/8/9/10: Culvert Cleaning (Fully blocked):

08 - 60 - 008 600mm dia;
08 - 60 - 009 900mm dia;
08 - 60 - 010 1200mm dia

This activity involves the cleaning of culverts of specified sizes including pipe barrels, the outlet/inlet structures, and the outlet drains, keeping them free of all debris, weed, silt and any obstruction to ensure free passage of water at all times. The debris shall be deposited in approved spoil dumps as directed by the Engineer

Fully blocked culvert shall be those with greater than half of the barrel blocked.
Correct widths and slopes of the outlet drains shall be maintained. The gradient of the outlet drain shall be not less than 2 %.

All broken culvert barrels discovered in the course of carrying out this activity shall be reported to the Engineer.

This activity should be carried out before the onset of the rains, or as directed by the Engineer. The Contractor shall use **Labour** to carry out this item of work.
Work Method: **LB**

Quality Control

The culverts shall be checked as free from debris, to the satisfaction of the Engineer. Measurement Unit: m
The measurement shall be the length of culvert, including the outlet drain cleaned. Payment
The unit rate shall be full compensation for **labour**, tools and incidental costs required to carry out the work.

08-60-011/015 Concrete Culvert Repair / Replacement – Rings

08-60-11 300 mm
08-60-12 450 mm
08-60-13 600 mm

08-60-14 900 mm
08-60-15 1200 mm

The Contractor shall supply, lay and join concrete pipes to replace damaged culvert rings, including the concrete bedding and backfilling as instructed by the engineer.

The pipes shall be of Class 20/20 concrete, at least 28 days cured, and manufactured on site or procured from a supplier approved by the Engineer. The pipes shall be laid on a bedding of Class 15/20 concrete.
The culvert ring shall follow the existing gradient and shall be free flowing – minimum 2%.
Backfilling shall be carried with approved material and compacted in layers not exceeding 150 mm loose depth and placed evenly on each side of the pipe. Ramps shall be shaped to achieve a minimum overfill of 75% of the pipe diameter, and shall be tapered back on the carriageway to provide a gradual approach, as directed by the Engineer.

On completion the inside of the culvert shall be smooth, without displaced joints or other obstructions and true to line and level.

The Contractor shall use **Labour** and appropriate compaction **Equipment** to carry out this item work Work Method: **LB-MB**

Quality Control

- Concrete quality shall be checked for cracks, honey combing, and other defects.
- Before the pipes are laid, the gradient of the concrete bedding shall be checked and shall not be less than 2%
- The joints shall be checked to see that they have been properly made.

Measurement Unit: m

The measurement shall be in linear metres of the installed Type and size of culvert specified, measured net according to the Drawings.

Payment

The unit rate shall be the full compensation for labour, tools, materials, equipment and any other incidentals that may be required in carrying out the work.

08-60-021/029 Supply and Installation of Concrete Pipe Culverts

08-60-016	**300**	**mm**	**unhaunched**
08-60-021	**300**	**mm**	**surrounds**
08-60-022	**450**	**mm**	**unhaunched**
08-60-023	**450**	**mm**	**surrounds**
08-60-024	**600**	**mm**	**unhaunched**
08-60-025	**600**	**mm**	**surrounds**
08-60-026	**900**	**mm**	**unhaunched**
08-60-027	**900**	**mm**	**surrounds**
08-60-028	**1200 mm**		**unhaunched**
08-60-029	**1200 mm**		**surrounds**

The Contractor shall supply, lay and join concrete pipes to form culverts, including the concrete bedding; haunching or surrounds; and backfilling, in accordance with the Drawings for the Type and
82

diameter specified in the Contract or directed by the Engineer.

The pipes shall be of Class 20/20 concrete, at least 28 days cured, and manufactured on site or procured from a supplier approved by the Engineer and preferably ogee jointed. The pipes shall be laid on a bedding of Class 15/20 concrete of dimensions as shown on the Drawings and jointed with cement mortar 1:4.

The culvert gradient including the outlet shall be a minimum 2%.
The pipes shall be surrounded with Class 15/20 concrete to the dimensions shown on the Drawings or as directed by the Engineer.
Backfilling shall be carried with approved material and compacted in layers not exceeding 150 mm loose depth and placed evenly on each side of the pipe. Ramps shall be shaped to achieve a minimum overfill of 75% of the pipe diameter, and shall be tapered back on the carriageway to provide a gradual approach, as directed by the Engineer.

If the Contractor wishes to construct culverts on site, using inflatable or collapsible forms the Engineer's approval shall first be sought for the proposed working method.

On completion the inside of the culvert shall be smooth, without displaced joints or other obstructions and true to line and level.

The Contractor shall use **Labour** and appropriate compaction **Equipment** to carry out this item work Work Method: LM-MB
Quality Control

- Concrete quality shall be checked for cracks, honey combing, and other defects.
- Before the pipes are laid, the gradient of the concrete bedding shall be checked and shall not be less than 2%
- The joints shall be checked to see that they have been properly made.

Measurement Unit: m

The measurement shall be in linear metres of the installed Type and size of culvert specified, measured net according to the Drawings.

Payment

The unit rate shall be the full compensation for labour, tools, materials, equipment and any other incidentals that may be required in carrying out the work.

08- 60-017 Head Wall Repair - Masonry

This activity involves the repairs to damaged head walls and wing walls built in masonry.

Where directed by the Engineer, the masonry walls shall be inspected and loose or missing stone re- secured or replaced. Damaged pointing shall be repaired with cement mortar 1:4 and finished flush with the stonework.

The Contractor shall use **Labour** to carry out this item of work Work Method: **LB**
Quality Control

- The stability of the walls and the pointing shall be to the satisfaction of the Engineer.

Measurement Unit: No

The measurement shall be the number of walls repaired as directed by the Engineer. Payment
The unit rate shall be full compensation for labour, materials, tools, and incidental costs required to carry out the work.

08-60-18 Headwall Repair - Concrete

The activity involves the repairs to damaged concrete headwalls and wing walls, and to inlet/outlet concrete aprons. Concrete walls shall be inspected and repair works carried out as instructed by the Engineer to include breaking out and replacement of damaged concrete with similar material, and the rendering of open texture areas with cement mortar 1:4. Broken wall sections shall be re-built in 20/20 (1:2:4) concrete within formwork erected on the correct lines and levels in accordance with the Standard Drawings. Areas of new concrete and mortar shall be protected from direct sunlight and kept moist for 3 days.

The Contractor shall use Labour to carry out this item of work Work Method: **LB**
Quality Control

The work shall be carried out to the satisfaction of the Engineer. Measurement Unit: No
The measurement shall be the number of walls/aprons repaired. Payment
The unit shall be full compensation for labour, materials, tools, and incidental costs required to carry out the work.

08-60-19 Headwall Construction - Masonry

The Contractor shall construct inlet and outlet structures for culverts including headwalls, wingwalls in stone masonry or concrete block, and aprons in concrete to the dimensions and levels shown on the Drawings (Types 1 to 4) as directed by the Engineer. The walls shall be built on foundations of class 15/20 concrete and jointed with cement mortar 1:4. The aprons shall be in Class 20/20 concrete and after laying the surface shall be kept moist for 3 days.

The Contractor shall use **Labour** to carry out this item. Work Method: **LB-MB**
Quality Control

- The dimensions of the structures shall have a tolerance of +10mm
- The levels shall have a tolerance of +10mm
- The mortar joints shall be finished flush with the face of the walls.

Measurement Unit: m3

The measurement shall be the volume of the structures constructed, in whichever material, measured net according to the Drawings.

Payment
The unit rate shall be the full compensation for labour, tools, materials and any other incidentals that may be required in carrying out the work.

08-60-20 Headwall Construction – Concrete

The Contractor shall construct inlet and outlet structures for culverts in concrete to the dimensions and levels shown on the Drawings (Type 1 to 4) as directed by the Engineer.

Concrete shall be Class 20/20 unless otherwise specified. The formwork for the walls shall be erected on the concrete foundations, to the correct dimensions, and shall be approved by the Engineer before concrete is poured. Concrete shall be poured in a single lift and the top surface shall be kept moist for 3 days. Formwork may be struck after 2 days or as directed by the Engineer.

The Contractor shall use a concrete vibrator or other means approved by the Engineer to ensure full compaction of the concrete.

The Contractor shall use both **Labour** and appropriate **Equipment** to carry out this item. Work Method: LM-MB
Quality Control

- The dimensions of the structures shall have a maximum tolerance of + 20mm / - 10mm
- The workability and mix of concrete shall be checked using the slump test and shall have a slump limit as directed by the Engineer. The frequency of testing shall be determined by the Engineer
- The concrete shall be checked for cracks, honey combing and other defects at the time of striking the formwork.

Measurement Unit: m^3

The measurement shall be the volume of concrete in the completed structure, measured net in accordance with the Drawings.

Payment

The unit rate shall be the full compensation for labour, tools, materials, formwork, equipment and other incidentals that may be required in carrying out the work.

08-60-030 Excavate in soft material for culverts
08-08-60-031 Excavate in hard, material for culverts
08-60-032 Provide, lay and join 450mm inner dia. Concrete pipes 08-60-033 Provide, lay and join 600mm inner dia. Concrete pipes 08-60-034 Provide, lay and join 900mm inner dia. Concrete pipes 08-60-035 Provide, compact class 15/20 concrete

08-60-36 Provide, compact class 20/25 concrete
08-60-37 Provide and place A142 fabric mesh reinforcement 08-60-038 Selected backfill materials

These activities should be done in accordance with Bill 8, sub clauses 8.01 to 8.20 in the Standard Specifications for Roads and Bridges 1986.

The Contractor shall use both **Labour** and appropriate **Equipment** to carry out this item. Work Method: **LM-MB**
Quality Control

- The workability and mix of concrete for the classes 15/20 and 20/25 shall be checked using the slump test and shall have a slump limit as directed by the Engineer.
- The laying and joining of the culverts shall be subject to the approval of the engineer.

Measurement Unit: m

The measurement shall be the length of culvert laid. Payment
The unit rate shall be the full compensation for labour, tools, materials, formwork, equipment and other incidentals that may be required in carrying out the work.

08-70-01 : Stone Pitching

The Contractor shall lay stone pitching at locations shown on the Drawings or as directed by the Engineer, which shall include levelling the area to be covered with stone pitching, collecting stones, laying stones, applying mortar to the joints and constructing weep holes, if required.

The area to be covered with stone pitching shall be trimmed to the level and slope shown on the Drawings or as directed by the Engineer. The prepared surface shall be firm and well compacted, with hand rammers.

The stones shall have minimum dimensions of 150mm and maximum 300mm and shall be set on the flat side and securely bedded, with the largest dimensions at right angles to the flow of water, in an interlocking pattern so as to leave only a minimum of voids between the stones which shall be filled with suitably shaped and tightly wedged spalls. The top of the pitching shall be finished flush with the adjacent material.

The stones shall be placed in full contact with the surface and bedded into cement mortar 1:4 with a minimum thickness of 100 mm. The mortar shall be worked into the pitching so that the voids between the stones are filled to the full depth of the pitching. The mortar shall be finished flush with the surface of the stones.

Weep holes shall be provided to stone pitching on slopes as directed by the Engineer.

The surface of the stone pitching shall be protected from direct sunshine and kept moist for 2 days. The Contractor shall use **Labour** to carry out this item.
Work Method: **LB**

Quality Control

- The quality of pitching shall be checked for gaps and voids.
- The dimensions of the area of stone pitching shall have a tolerance of +100mm Measurement Unit: m2

The measurement shall be the total area of pitching calculated as the net area, measured on the slope.
86

Payment

The unit rate shall be full compensation, for labour, tools, materials, and incidental costs required for carrying out the work.

08-70-02 : Stone Pitching Repair

This activity involves the repair of stone pitching on slopes, in inlet/outlet aprons and access drifts. The stone pitching shall be inspected and repairs carried out as directed by the Engineer, including the replacement and re-bedding of missing or loose stones; the repair of mortar jointing: and the cleaning out of weep holes, as required. All work shall be to the lines and levels of the original construction with new stonework and mortar being flush with the adjacent materials.

The Contractor shall use **Labour** to carry out this work Work Method: **LB**
Quality Control

The work shall be carried out to the satisfaction of the Engineer. Measurement Unit: m2
The measurement shall be the net surface area of the repairs. Payment
The unit rate shall be full compensation, for labour, tools, materials, and incidental costs required to carry out the work.

08-70-03 : Gabion Repair

The Contractor shall repair installed Gabions using 3 mm galvanized binding wire to its original dimensions as directed by the Engineer.

The Contractor shall use Labour to carry out this item. Work Method: **LB**
Quality Control

The repair of the Gabions shall be approved by the Engineer. Measurement Unit: No
The measurement shall be the number of Gabion boxes repaired/installed. Payment
The unit rate shall be the full compensation for labour, materials, and any incidental item costs necessary to carry out the work.

08-70-04 : Gabion Installation

The Contractor shall provide and install Gabions as retaining walls and anti-erosion structures at

locations shown on the Drawings or as directed by the Engineer.

Gabions shall include mattresses and boxes and for purposes of construction, measurement and payment, no distinction shall be made between them.

Gabions shall be ‘Maccaferi” boxes or ‘Reno’ matresses or equivalent approved by the Engineer.
The surfaces on which the Gabions are to be laid prior to being filled with rock shall be levelled to the depths and dimensions shown on the Drawings or as directed by the Engineer.
Gabion boxes shall be tied together with 3 mm galvanised binding wire securing all edges at 150mm intervals.
The Contractor shall use **Labour** to carry out this item. Work Method: **LB**
Quality Control

The placing and tying of the Gabions shall be approved by the Engineer before filling commences. Measurement Unit: No
The measurement shall be the number of Gabion boxes installed. Payment
The unit rate shall be the full compensation for labour, materials, and any incidental item costs necessary to carry out the work.

08-70-05 : Rock fill to Gabions

The Contractor shall provide selected rock, crushed if necessary, and carry out the packing and compacting of the rock inside the Gabion boxes.

The boxes shall be filled in layers from the sides towards the middle in an interlocking stone matrix to prevent deformation and bulging. The interior and top layers of the boxes shall be hand packed with smaller stone to form a tightly compact structure and rammed in place. Care shall be taken to ensure that each layer of boxes is filled evenly and to a level surface before the next course of boxes is placed.

The Contractor shall use a combination of **Labour** and transport **Equipment** to carry out this activity. Work method: **LB-MB**
Quality Control

The filling and compaction of the stones in the Gabion boxes shall be approved by the Engineer. Measurement Unit m^3
Rock fill to Gabions shall be the volume of Gabions filled. Payment
The unit rate shall be the full compensation for labour, tools, materials and incidental costs required for carrying out the work.

88

08-70-06 : Construction of Scour Checks (Concrete) 08-70-007: Construction of Scour Checks (Masonry)
08-70-08 : Construction of Scour Checks (Wooden Stakes)

The Contractor shall construct scour checks using either stones, wooden stakes, or concrete as instructed by the Engineer. Construction of concrete scour checks shall be in class 20/20 concrete, unless otherwise specified, and to the details shown in the Drawings.
Spacing for scour checks shall be as shown in Table 8.1, or as directed by the Engineer. Table 8.1: Scour checks spacing

Gradient of Drain	Scour Check Spacing	Gradient of Drain	Scour Check Spacing
4% or less	not required	8%	7.5m
5%	20m	9%	6m
6%	15m	10%	5m
7%	10m	>10%	4m

The Contractor shall use **Labour** to carry out this item. Work method: **LB**
Quality Control

The spacing of the scour checks shall have a tolerance of + 0.5m
The sizes of the wooden stakes and stones used shall be in accordance with the Drawings The shape of the scour check shall be checked using the scour check template.

Measurement Unit: No.

The measurement shall be the **number** of scour checks constructed. Payment
The unit rate shall be full compensation, for labour, tools, materials and incidental costs required for carrying out the work.

08-70-09 : Scour Check Repair - masonry
08-70-10 : Scour Check Repair - wooden
08-70-11 : Scour Check Repair - concrete

This activity involves the repair of Scour Checks using stones or wooden stakes or concrete. The construction details shall be shown in the Drawings or as instructed by the Engineer.

Scour checks shall be inspected and the repairs carried out as directed by the Engineer, which shall include replacement of missing or broken stonework and stakes; and the repair of damaged concrete, to the original lines, levels, and Specifications.

The Contractor shall use **Labour** to carry out this item work.

Work Method: **LB**

Quality Control

The sizes of the wooden stakes and stones used shall be as the original construction. The shape of the scour check shall be checked using the scour check template.
Measurement: No.
The unit rate of measurement shall be the number of scour checks repaired. Payment
The unit rate shall be full compensation, for labour, tools, materials, and incidental costs required for carrying out the work.

08-70-12 At-level Scour Checks

The Contractor shall select and place flat stones of minimum dimensions 0.10-0.15m in gently sloping channels (parabolic waterway) at locations and intervals as shown in drawing C9c. The stones shall be placed in a manner to ensure minimum voids within the structure. A trench 0.2m deep by 0.2m wide shall be excavated in the invert of the channel and extended 0.2m into the slopes. Stones shall be laid up to the level of the invert with the middle section lower than the sides to form a spill way. The spacing of the checks shall be 1-4 metres, as directed by the Engineer.

The Contractor shall use **Labour** to carry out this item. Work Method: **LB**
Quality Control

The construction and spacing of the scour checks shall be checked by the Engineer. Measurement Unit: **No**
The measurement shall be the number of scour checks constructed. Payment
The unit rate shall be full compensation for labour, tools, materials and incidental costs required to carry out the work.
The payment for the construction of the parabolic waterway is under item 08-50-005

08-80-13 Gully – head protection - Stone Chute Stabilisation
08-80-14 Gully – head protection - Stone and Post Chute Stabilisation

The Contractor shall construct gully-head protection works as directed by the Engineer to the dimensions and details shown on Drawings C9d.

The dimensions of the stones shall not be less than 200mm and the volume not less than 0.01m3 for the smaller stones and pebbles to be used as the transition layer between the stone structure and the ground. No rounded stones shall be used. Posts shall be durable hardwood minimum 900mm in length and 15mm diameter.
The gully head shall be excavated as shown on Drawings to form a firm base for the stone layers. The initial layer shall be the small stones and gravel to a depth of 150mm after which the larger stone shall be carefully placed to form a compact matrix. Posts shall be driven a minimum of 600mm into the
90

ground at spacing as directed by the Engineer.

The Contractor shall use **Labour** to carry out this item Work Method: **LB**
Quality Control
The stone dimensions and construction shall be checked by the Engineer. Measurement Unit: No
The measurement shall be number of units constructed Payment
The unit rate shall be full compensation for labour, tools, materials and incidental costs required to carry out the work.

08-80-15 Stone Check Dams
08-80-16 Stone and Post Check Dams

The Contractor shall construct check dams in erosion gullies to the dimensions and details shown on Drawing C9e and/or as directed by the Engineer.
The dimensions of the stones in the main structure shall not be less than 200mm and the volume not less than 0.01 m3 for the stones and pebbles for the transition layer between the stone structure and the ground. No rounded stones shall be used. Posts shall be durable treated hardwood of minimum diameter 0.10m, of minimum length 1.6m, driven at least 600mm into the ground. Stones shall be carefully hand-packed to provide a stable structure with a minimum of voids.

The dam checks shall be constructed such that the top of the dam is lower than the level of the adjacent land to leave sufficient channel for water flow, the crest of the check dam is parabolic in shape forming the spillway and it is keyed into the excavation of the gully floor and into the sides of the gully. The gully floor below the check dam must be protected from erosion by an apron with parabolic shape protecting the sides of the channel. The posts must be hammered into the ground to a depth equal to the post height above the ground or a minimum of 0.6 m.

The spacing of the check dams shall be as shown in the table below:

Check Dam Spacing					
Gradient	**Height of dam spill way (m)**				
%	**0.15**	**0.25**	**0.50**	**0.75**	**1.00**
5	15.0	25.0			
7	5.0	8.7	17.5	25	35
10	2.5	4.2	8.4	12.6	16.8
15	1.4	2.3	4.6	6.9	9.2
20	0.9	1.6	3.2	4.8	6.4
25		1.3	2.5	3.8	5.0
30		1.0	2.0	3.0	4.0
40			1.6	2.4	3.2
50			1.2	1.8	2.0

Work Method: **LB**

The Contractor shall use **Labour** to carry out this item Quality Control
The Engineer shall check the workmanship and spacing of the check dams. Measurement Unit: No
The measurement shall be the number of check dams constructed Payment
The unit rate shall be full compensation for labour, tools, materials and incidental costs required to carry out the work.

08- 080-001 Access Drifts (Stone Pitching)

The Contractor shall construct Access drifts in grouted stone pitching to the dimensions as shown on drawing C18 or as directed by the Engineer. This shall include the provision of stone and the levelling of the areas to be covered.

The stone pitching for Access drifts shall comply with the requirement of 08–70-001 (stone pitching) with the addition of masonry toes at each end of the drift as shown on the Drawings.
The area to be covered shall be trimmed to the line and slope shown on the Drawings or as directed by the Engineer, and the prepared surface compacted with hand rammers or appropriate equipment.
The grouted stone pitching shall be covered with wet sacking or other approved cover for not less than 4 days after laying and shall not be subject to loading until adequate strength has been developed as instructed by the Engineer.

The Contractor shall use **Labour** and appropriate **Equipment** to carry out this item. Work Method: **LB-MB**
Quality Control

i) Stone pitching quality shall be as for 08-70-001 Measurement Unit m2
The measurement shall be the area of stone pitching, measured net according to the Drawings. Payment
The unit rate shall be full compensation for labour, tools, materials, equipment and incidental costs required for carrying out the work.

BILL 10: GRADING AND GRAVELLING
Scope:
Grading covers the work of reinstating the road carriageway to the correct camber by removing the high points and filling gullies, corrugations, and wheel ruts to restore a smooth running surface.

Grading can either be done by labour (Manual Reshaping) or by Machine (Motorized grading or towed grading).

92

Manual reshaping is preferable where there is sufficient labour. For existing roads with side drains light manual reshaping should be used as defined in 10-50-004. Heavy manual reshaping should be used for roads that have deteriorated to such an extent that the drains and carriageway need to be re-instated. Heavy Manual Reshaping is defined under Bill 5 – Earth Works.

Light grading is carried out on good and fair roads as a maintenance activity while heavy grading is for re-establishing a road in poor or very poor condition.
Gravelling consists of the excavation; loading, hauling, dumping, spreading and compacting using approved equipment of gravel wearing course material on the formation of the road carriageway. Gravel shall include lateritic gravel, quartzitic gravel, calcareous gravel, decomposed rock, soft stone coral rag, clayey sand and crushed rock.

The material may be obtained from quarries, borrow pits or excavation in cuttings as directed by the Engineer. Gravel material shall conform to the requirement given in

Table 10.1: Requirement for Gravel Wearing Course

GRADING REQUIREMENTS	
Sieve (mm)	% by Weight Passing
40	100
28	95 – 100
20	85 – 100
14	65 – 100
10	55 – 100
5	35 – 92
2	23 – 77
1	18 – 62
0.425	14 – 50
0.075	10 – 40

PLASTICITY INDEX REQUIREMENTS PI		
Zone	Min	Max
WET: Mean annual rainfall > 500mm	5	20
DRY: Mean annual Rainfall < 500mm	10	30

BEARING STRENGTH REQUIREMENTS		
Traffic Commercial VPD	CBR	DCP Equivalent mm/Blow
>15	20	11
<15	15	14
CBR at 95 % MDD, Modified AASHTO and 4 days soaking		
Lower quality material (CBR 15) may be accepted if no better material can be found		

For “Quarry Waste” gravel stones of maximum dimension 80mm may be permitted

The Engineer shall approve quarries and the extent of their exploitation. The possible quarries shall be shown to the Contractor prior to commencement of the Works. The Contractor shall be responsible for the acquisition of the quarry rights and shall conduct respective negotiations with landowners and affected communities.

Alternative sources of gravel material whose quality can be shown to be in compliance with the specification requirements may be used, with the approval of the Engineer. The Contractor is deemed to have included in his rates for the provision of the gravel material.

10-50-01 : Heavy Grading without watering and compaction.

Heavy grading without watering and compaction shall only be done when there is sufficient moisture in the material and the material can be compacted by traffic.

The Contractor shall scarify the existing carriageway surface, cutting high spots and moving materials to fill potholes, corrugations and wheel ruts and reshape the surface to the specified camber, using a Motor grader unless otherwise directed by the Engineer. All loose rocks, roots and grasses shall be removed first and disposed of well clear of the drains.

Pegs 300 to 400mm long shall be placed at 20 m intervals to mark edge of the carriageway.

The material shall be graded toward the centre of the road starting from both edges until the specified camber is achieved. Suitable material from the side drains may be used as additional material. Any further material needed to achieve the correct camber shall be from an approved source.

No grading shall be carried out in dry conditions.
The Contractor shall use **Equipment** to carry out this item. Work Method: **MB**
Quality Control

- The width of the carriageway shall be checked at every 50m intervals and have a tolerance of + 50mm or -20mm.
- The camber shall be checked with a camber board at 25m intervals and shall have a tolerance of

+ 1%

Measurement Unit: m2

The measurement shall be the area of carriageway graded, measured net according to the specified width and measured length graded.

Payment

The unit rate shall be the full compensation for labour, tools, equipment and incidental costs required for carrying out the work.

10-50-02 : Heavy Grading with watering and compaction.

The Contractor shall scarify the existing carriageway surface, cutting high spots and moving materials to fill potholes, corrugations and wheel ruts and reshape the surface to the specified camber, using a Motor grader unless otherwise directed by the Engineer. All loose rocks, roots and grasses shall be removed first and disposed of well clear of the drains.

Pegs 300 to 400mm long shall be placed at 20 m intervals to mark edge of the carriageway.

The material shall be bladed toward the centre of the road starting from both edges until the specified camber is achieved. Suitable material from the side drains may be used as additional material. Any further material needed to achieve the correct camber shall be from an approved source. Compaction shall be carried out using appropriate equipment approved by the Engineer, from the carriageway edges to the centerline in overlapping passes.

In order to achieve the desired compaction water shall be added in an even manner without transverse or longitudinal flow.

The Contractor shall use **Equipment** to carry out this item. Work Method: **MB**
Quality Control

- The width of the carriageway shall be checked at every 50m intervals and have a tolerance of + 50mm or -20mm.

94

- The camber shall be checked with a camber board at 25m intervals and shall have a tolerance of + 1%
- Longitudinal levels shall be checked with a straight edge of minimum 2.7 m length. Maximum tolerance of + 10 mm.
- Compaction shall show no movement of material under the roller, minimum of 6 passes.
- Compaction test standard shall be 95% MDD (AASHTO T99) Measurement Unit: m2

The measurement shall be the area of carriageway graded, measured net according to the specified width and measured length graded.
Payment

The unit rate shall be the full compensation for labour, tools, equipment and incidental costs required for carrying out the work.

10-50- 004: Carriageway Grading - Light Grading

Light grading shall only be done when there is sufficient moisture in the material. The Contractor shall grade the carriageway to control roughness and corrugations using either a Towed or a Motor grader. The width of the carriageway shall be as specified for the Road Class.
Pegs 200 to 300mm long shall be placed at 20 m intervals to mark edge of the carriageway

The material shall be bladed toward the centre of the road, starting from both edges, to the specified camber. Where instructed by the Engineer, suitable materials from the side drains may be used to fill potholes and gullies in the carriageway. Any further material needed to re-form the camber shall be from an approved source. Compaction shall be achieved using the wheels of the equipment, tracked evenly over the full surface, or by other approved means.

No grading shall be carried out in dry conditions.

The Contractor shall use **Equipment** to carry out this item. Work Method: **MB**
Quality Control

- The width of the carriageway shall be checked at every 50m intervals and have a tolerance of +50mm or -20mm
- The camber shall be checked with a camber board at 25m intervals and shall have a tolerance of + 1%
- Longitudinal levels shall be checked with a straight edge of minimum 2.7 m length. Maximum tolerance of +10 mm.

Measurement Unit: m2

The measurement shall be the area of carriageway graded, measured net according to the specified width and measured length graded.

Payment

The unit rate shall be the full compensation for labour, tools, equipment and incidental costs required for carrying out the work.

10-50-004: Light Manual Reshaping (Grub edge, fill gullies and Reshape carriageway)

This activity involves trimming the edge of the carriageway, grubbing grass from the carriageway filling gullies and ruts on the carriageway and reshaping of the camber of the road to the original standard and shape. No grass shall be grubbed from the shoulders, but it shall be cut to a maximum height of 50mm.

For earth roads materials from the side drains may be used to reshape the carriageway and fill gullies. Where additional suitable material is required to reinstate the camber to the required shape, this material shall be obtained from approved sources nearest to the final deposition area.
For gravel roads the gravel shall be obtained from the stacks placed at intervals along the road for this purpose if applicable.

The fill material shall be watered, mixed and compacted using suitable tampers to a finished level 25mm above the surrounding road surface.

This activity shall be carried out before and after the rains, or as directed by the Engineer. The Contractor shall apply **Labour** methods to carry out this item.
Work Method: **LB**

Quality Control

- The width of the carriageway including the shoulders shall be checked at 100m intervals with tolerance of +50mm or -20mm
- The camber shall be checked using camber board at 50m intervals and shall have a tolerance of + 1%
- The quality of fill material shall be approved by the Engineer
- The minimum compaction to be applied to fill areas shall be such that no rammer imprint on the surface shall be seen.

Measurement Unit: m2
The measurement shall be the area of carriageway shaped. Payment
The unit rate shall be the full compensation for labour, tools and incidental costs required for carrying out the work.

10-60-001: Provide Gravel Wearing Course (Excavation, Free haul, spreading and Compaction of Gravel)

Excavation of Gravel

Gravel shall be excavated from quarries approved by the Engineer, and the Contractor shall inform the Engineer if the quality/availability of the gravel changes during the course of excavation.

Stones and boulders with one dimension greater than 80mm shall be removed from the excavated gravel and deposited outside the quarry at locations approved by the Engineer. Such stones and boulders may be reused in other parts of Works with the approval of the Engineer.
Excavation and loading shall normally be by labour unless, at the request of the Contractor, the Engineer allows the use of equipment.
96

The Contractor shall use **Labour** and/or **Equipment** to carry out this work, as directed by the Engineer. Work Method: LB or MB

Quality Control:

- Oversize stones and boulders shall not be loaded for haulage to the road.
- Areas containing deleterious material shall not be excavated.

Free haul, spreading and Compaction of Gravel

Free haul involves the transportation of gravel material for the first 1.5 km from the quarry. The Contractor shall spread and compact gravel material, in a manner to ensure a uniform thickness of the layer across the full width of the carriageway and shaped to the specified camber. Spreading also includes the removal of any oversized stones or boulders, which cannot be broken down to the required size, to spoil dumps. Gravel shall be spread within 24 hours of off-loading.

Compaction of the gravel material shall be carried out from the carriageway edges to the centerline by overlapping passes of the compaction equipment. The number of passes shall be as directed by the Engineer dependent upon the equipment used and the material being compacted. Unless otherwise instructed the moisture content of the material shall be within + 2% of optimum

Where additional moisture is required water shall be applied in an even manner and the rate of application shall be such that no transverse or longitudinal flows occur.

The Engineer may instruct the Contractor to carry out density tests on the compacted material to ensure that an acceptable standard has been achieved.

The Contractor shall use **Equipment** for haulage and Labour for spreading unless the Engineer instructs otherwise.

Work Method: **LB-MB**

Quality Control:

- The gravel surface width shall be checked at 100m intervals and shall have a tolerance of +50mm
- Trial holes shall be dug as directed by the Engineer to check the gravel thickness and shall have a tolerance of + 5mm / - 0mm
- The camber shall be checked at 50m intervals and the maximum tolerance shall be +1 %
- The longitudinal profile shall be checked after the compaction of each load to ensure a smooth surface with no corrugations or depressions, tolerance of + 10mm.
- Compaction shall show no movement of material under the roller, minimum of 6 passes.
- Compaction test standard shall be 95% MDD (AASHTO T180) Measurement Unit: m3

The measurement shall be the volume of compacted gravel surfacing measured net according to the Drawings and shall include the excavation and the 1.5km ‘free’ haul distance

Payment

The unit rate shall be the full compensation for labour, tools, equipment and incidental costs required for carrying out the work.

10–60- 002: Haulage (Overhaul beyond 1.5km)

The Contractor shall haul by appropriate equipment and off-load on the road as directed by the Engineer. Where the quantity delivered in any load falls short of the equipment capacity, off-loading shall only be permitted after the agreed spacing is adjusted accordingly.

No vehicle with a capacity of greater than 10 tonnes shall be permitted to off-load gravel directly on the prepared formation unless approved by the Engineer. Any greater loads shall be dumped in stockpiles off-road and transported to the formation areas by appropriate means.
Where loads supplied are found to contain material other than from the approved quarry and are of unacceptable quality, the Contractor shall remove them from site at the Contractor's expense.

The Contractor shall use **Equipment** to carry out this Item. Work Method: **MB**
Quality Control:

- No haulage equipment shall be used until its capacity has been ascertained by the Engineer
- The quality of gravel dumped on the road shall be according to the Specifications
- The quantity of material delivered in each load shall be checked before dumping is allowed
- The distance between the stacks shall be checked to ensure the required compacted thickness will be achieved.

Measurement Unit: m3km (Overhaul)
The Contractor shall allow in the rates for item 10-60-001 for a 'free' haul distance of 1.5km. The 'overhaul' shall be the distance, greater than 1.5km, to the centre point of the section where the gravel is being dumped and processed, measured along the shortest route as determined by the Engineer.

The measurement of overhaul shall be the product of the volume of the gravel hauled and the distance to the centre point as indicated above.

Payment

The unit rate shall include full compensation for labour, tools, equipment, and incidental costs necessary to carry out the work.

10-60-004 Gravel Patching (Excavation, Free haul, Spreading and Compaction of Gravel) Excavation of Gravel
Gravel shall be excavated from quarries approved by the Engineer, and the Contractor shall inform the Engineer if the quality/availability of the gravel changes during the course of excavation.

Stones and boulders with one dimension greater than 80mm shall be removed from the excavated gravel and deposited outside the quarry at locations approved by the Engineer. Such stones and boulders may be reused in other parts of Works with the approval of the Engineer.

Excavation and loading shall normally be by labour unless, at the request of the Contractor, the Engineer allows the use of equipment.

The Contractor shall use **Labour** and/or **Equipment** to carry out this work, as directed by the Engineer.

Work Method: **LB or MB**
98

Quality Control:

- Oversize stones and boulders shall not be loaded for haulage to the road.
- Areas containing deleterious material shall not be excavated.

Free haul, preparation, spreading and Compaction of Gravel

Free haul involves the transportation of gravel material for the first 1.5 km from the quarry. The Contractor shall prepare the area to be patched by removing excessive water and loose material. The contractor shall then dump, spread and compact gravel material, in a manner to ensure a uniform thickness of the layer across the full width of the carriageway and shaped to the specified camber. Spreading also includes the removal of any oversized stones or boulders, which cannot be broken down to the required size, to spoil dumps. Gravel shall be spread within 24 hours of off-loading.

Compaction of the gravel material shall be carried by overlapping passes of the compaction equipment. The number of passes shall be as directed by the Engineer dependent upon the equipment used and the material being compacted. Unless otherwise instructed the moisture content of the material shall be within + 2% of optimum

Where additional moisture is required water shall be applied in an even manner and the rate of application shall be such that no transverse or longitudinal flows occur.

The Engineer may instruct the Contractor to carry out density tests on the compacted material to ensure that an acceptable standard has been achieved.

The Contractor shall use **Equipment** for haulage and **Labour** for spreading unless the Engineer instructs otherwise.

Work Method: **LB-MB**

Quality Control:

- The gravel surface width shall be checked at 100m intervals and shall have a tolerance of
+ 50mm
- Trial holes shall be dug as directed by the Engineer to check the gravel thickness and shall have a tolerance of + 5mm / - 20mm
- The camber shall be checked at 50m intervals and the maximum tolerance shall be + 1 %
- The longitudinal profile shall be checked after the compaction of each load to ensure a smooth surface with no corrugations or depressions, tolerance of + 10mm.
- Compaction shall show no movement of material under the roller, minimum of 6 passes.
- Compaction test standard shall be 95% MDD (AASHTO T180) Measurement Unit: m3

The measurement shall be the volume of compacted gravel surfacing measured net according to the Drawings and shall include the excavation and the 1.5km 'free' haul distance

Payment
The unit rate shall be the full compensation for labour, tools, equipment and incidental costs required for carrying out the work.

10-70-01 : Site clearance of borrow area.

This activity should be done in accordance with Bill 4, sub clauses 4.01 to 4.05 in the Standard Specifications for Roads and Bridges 1986.

10-70-02 : Removal of Overburden

The Contractor shall remove overburden from quarries and borrow pits, which includes excavation, loading, hauling and stockpiling at approved locations. The thickness of the overburden layer to be removed shall be determined from trial pits dug on a 30 metre grid within the quarry area.

The overburden shall be deposited neatly for re-use to reinstate the quarry on completion of the Works, as directed by the Engineer.
The Contractor shall use **Labour** to carry out this item unless the Engineer instructs otherwise. Work Method: **LB or MB**
Quality Control

- The location and manner of stock piling of the overburden for the reinstatement of the quarry shall be to the approval of the Engineer.

Measurement Unit: m3

The measurement shall be the volume of overburden removed as calculated from the cleared area and the mean depth indicated from the trial pits.

Payment

The unit rate shall include full compensation for labour, tools materials and equipment, haulage, stockpiling and incidental costs required for carrying out the work.

10-70-03 : Restoration of Quarries and Borrow Pits

The Contractor shall level the ground, return the topsoil from the stockpiles, and uniformly spread the material over the full excavation area.

Adequate drainage provisions shall be made to protect the excavation areas, and where necessary appropriate protection measures shall be taken to avoid erosion of the spread topsoil layer. Grass and trees shall be replanted as directed by the Engineer.

The Contractor shall use **Labour** and/or **Equipmen**t to carry out this item as agreed by the Engineer. Work Method: **LB, LM-MB**
Quality Control

The Engineer shall check that the required measurements have been satisfactorily taken. Measurement and Payment: Provisional Sum
Payment shall be made on a Dayworks basis for the labour and equipment as directed by the Engineer

BILL 17: Concrete Works

50-01 : Bridge Deck Replacement - Concrete 17-50-002: Bridge Abutment Repair – Concrete

These activities involve the repair or replacement of concrete bridge deck and abutment, including the removal of loose or broken concrete, cutting back damaged areas to sound surfaces and repairing with
10

concrete of similar Class to the original.

The bridge deck and abutment shall be inspected and necessary repairs shall be instructed by the Engineer. All Holes and voids shall be cleared of debris, loose material and dust, and shall be well watered before the new concrete is placed. The new concrete shall be firmly rammed against the existing surfaces and finished flush with the surrounding materials. The surface of the repair shall be protected from direct sunlight and kept moist for 3 days. Concrete shall be Class 20/20 unless otherwise directed by the Engineer.

In the event of complete replacement of the abutment and deck, the activity shall be carried in accordance with Section 17 Sub Clauses 1701 to 1741 of the Standard Specifications for Road and Bridge Construction.

The Contractor shall use **Labour** to carry out this item Work Method **LB**
Quality Control

The work shall be carried out to the satisfaction of the Engineer. Measurement Unit: m3
The measurement shall be the volume of concrete used for the repair. Payment:
The unit rate shall be the full compensation for labour, tools, materials and incidental costs required to carry out the work.

17-50-003: Bridge Abutment Repair - Masonry

This activity involves the repair of masonry bridge abutment, including the removal of loose or broken stones and then repairing the damaged parts with similar size stones using mortar of 1:4(cement: sand by volume)..

The abutrment shall be inspected and necessary repairs shall be instructed by the Engineer. All loose stones shall be removed and replaced afresh. The stones shall be laid with a bond allowing a minimum overlap of ¼ the length of the smallest stone. The joints shall be a minimum of 10mm and no stone shall touch another stone but shall be laid fully on a mortar bed. The mortar joints on the face of the abutment shall be painted and raked to produce a durable finish.

The Contractor shall use **Labour** to carry out this item Work Method **LB**
Quality Control

The work shall be carried out to the satisfaction of the Engineer. Measurement Unit: m3
The measurement shall be the abutment repaired. Payment:
The unit rate shall be the full compensation for labour, tools, materials and incidental costs required to

carry out the work.

17-50-004: Drift Repairs – Concrete

This activity involves the repair of concrete drifts, including the removal of loose or broken concrete, cutting back damaged areas to sound surfaces and repairing with concrete of similar Class to the original.
The drift shall be inspected and necessary repairs shall be instructed by the Engineer. Holes and voids shall be cleared of debris, loose material and dust, and shall be well watered before the new concrete is placed. The new concrete shall be firmly rammed against the existing surfaces and finished flush with the surrounding materials. The surface of the repair shall be protected from direct sunlight and kept moist for 3 days. Concrete shall be Class 25/20 unless otherwise directed by the Engineer.

The Contractor shall use **Labour** to carry out this item Work Method **LB**
Quality Control

The work shall be carried out to the satisfaction of the Engineer. Measurement Unit: m3
The measurement shall be the volume of concrete used for the repair. Payment:
The unit rate shall be the full compensation for labour, tools, materials and incidental costs required to carry out the work.

17-60-001: Provide, place and compact class 15/20 concrete for blinding 17-60-002: Provide, place and compact class 25/20 concrete
17-60-003: Vertical formwork class F2 finish 17-60-004: Horizontal formwork class F2 finish
17-60-005: Provide, cut, bend and fix into position high yield reinforcement bar to BS 44461 as directed and as shown on the drawing

These activities should be done in accordance with Bill 17 sub section 17.01 to 17.41 of the Standard Specifications for Roads and Bridges 1986.

17-70-001: Drift Construction by contract 17-70-002: Bridge Construction by contract

The activities for these items will be defined in a separate specific document and only summarised under these item numbers.

17-70-003: Concrete Road Section (Concrete Slabs)

The Contractor shall construct the concrete road carriageway on the prepared, shaped and compacted road formation as approved by the Engineer. Concrete shall be class 20/20 and may be batched by volume, but shall be mixed in a mechanical mixer. The mix shall be as shown below.

Concrete Class	**Nominal Mix by Volume**	**Batch with 1 bag Cement**		
		No. of boxes		
		Fine	**Coarse**	**Yield (approx)**
20/20	1:2:4 (20mm max aggregate)	2	4	$0.16m^3$

The water added shall be the minimum necessary to give sufficient workability for efficient consolidation of the concrete. For concrete placed by hand this shall be 23-27 litres per bag of cement. For mechanical mixing and compacting (poker vibrator) the water content shall be reduced to 20 litres per bag of cement.

The concrete shall be placed in formwork which is clean, smooth faced and secure from movement and leakage to the full depth of the carriageway (150mm) in clearly marked out bays. Steel reinforcing mesh mats (6mm) shall be laid at a depth 50mm below the finished surface as the concrete is being poured. Compaction of the concrete shall be by hand ramming or poker vibrator. The surface shall be tamped with a timber tamping bar to produce a uniform, transverse ridged surface.

Concrete pours shall normally be over half the carriageway width and in lengths between construction joints as directed by the Engineer, of 10-15 metres. Contraction joints if required shall correspond with the construction joints. Where directed by the Engineer expansion joints shall be formed in positions and in accordance with the details provided by the Engineer.

The surface of the concrete shall be covered and kept moist for at least 4 days to allow adequate curing. The Contractor shall make cubes for testing as directed by the Engineer.
All materials used for concrete production and the Contractor's working method shall be approved by the Engineer before

concreting is permitted.

The Contractor shall use **Labour** and **Equipment** to carry out this item. Work Method **LB - MB**
Quality Control

Slump test shall be to the standard specified by the Engineer in the range of 25-100mm. Cube strength shall be 27.5 N/mm2 at 28 days on an average of 4 cubes

Measurement Unit: m3

The measurement shall be the volume of concrete measured net according to the Drawings Payment
The unit rate shall include full compensation for labour, tools, equipment, materials and incidental costs necessary to carry out the work.

BILL 20: ROAD FURNITURE

Scope:

This bill comprises those items of Road Furniture to be erected and maintained as aids to road safety, including traffic signs and guardrails.

20-50-001: Road reserve boundary posts 20-50-002: Installation of fencing and gates 20-50-003: Repair/replace fence

These activities should be done in accordance with Bill 20 sub section 20.01 to 20.11 of the Standard Specifications for Roads and Bridges 1986.

20-50-005: Permanent Road Signs

The Contractor shall erect road / traffic signs of the type and at locations as directed by the Engineer. The signs materials and quality are shown on the Drawings. The signs shall be bedded in concrete Class 15/20 and shall be supported vertically until the concrete is set.

The Contractor shall use **Labour** to carry out this item. Work Method. **LB**
Quality Control

The Engineer shall check the sign position before concrete is backfilled. Measurement Unit: No
The measurement shall be the number of signs erected. Payment
The unit rate shall be the full compensation for labour, tools, materials and incidental costs required for carrying out the work.

20-50- 008: Guardrail Repair

This activity involves the repair of Guardrails (including rails, posts and fixings) to a properly aligned, vertical and secure condition. The repair shall include securing any loose posts by re-compaction or removal of any unsuitable material surrounding the post, importing and compaction of suitable materials to render the posts secure, and the re-fixing of the rails.

The Contractor shall use **Labour** to carry out this item. Work Method **LB**
Quality Control

The guardrails shall be checked as being properly aligned secure and in a vertical position The fixings shall be hand checked to be firmly fixed

Measurement Unit: m

The measurement shall be the length of Guardrail repaired Payment
The unit rate shall be the full compensation for labour, material, tools, and incidental costs required to carry out the work.

20-50-009: Guard Rail Replacement 20-50-010: Guard Rail Installation

The Contractor shall erect guardrails at locations shown on the Drawings or as directed by the Engineer. The guardrails shall comply with the requirements of the Road Authority and shall be erected on hard wood or treated timber posts of top diameter not less than 150mm.

Posts shall be drilled and shaped as shown on the Drawings and provided with the necessary bolts, nuts, washers and spacer blocks.
10

Holes excavated for the timber posts shall be spaced to suit the standard length of guardrail supplied, and shall be of sufficient size to permit the proper setting of the posts and to allow room for backfilling and compacting. At least 1 metre of a post shall be embedded in the ground. The backfilling shall be with 12:1 soil cement mixture, or as otherwise directed by the Engineer, after the erected rails have been approved by the Engineer.

The Contractor shall use **Labour** to carry out this item. Work Method **LB**
Quality Control

The Engineer shall check the post and rail erection before final backfilling. Measurement Unit: m
The measurement shall be the length of Guardrail erected. Payment
The unit rate shall be the full compensation for labour, tools, materials and incidental costs required for carrying out the work.

20-50-011: Handrail repair/installation

These activities should be done in accordance with Bill 20 sub section 20.01 to 20.11 of the Standard Specifications for Roads and Bridges 1986.

20-60-001: Traffic Sign Maintenance

This activity involves all the tasks required to ensure that the road signs and signposts are in a clean, properly aligned, vertical and secure condition; the replacement of missing or broken bolts, nuts or other fixings and the tightening of the same. The maintenance shall also extend to securing any loose posts by the re-compacting or removal of any unsuitable material surrounding the posts, importing and compacting of suitable material to render the post secure. Painting of the Traffic signs if required is also included in this item.

The Contractor shall use **Labour** to carry out this item. Work Method **LB**
Quality Control

The signs shall be clean and in vertical position The fixings shall be hand checked to be tight

Measurement Unit: No.

The measurement shall be number of signs maintained. Payment
The unit rate shall be the full compensation for labour, tools, material and incidental costs required to carry out the work.

BILL 22: DAYWORKS

ITEMS 22-50-001 to 22-79-018 are for the Schedule of Rates. The Engineer will include the relevant items for each specific contract document.

A Provisional Sum shall be included in the Bills of Quantities to cover the payment of equipment, labour and materials for work instructed by the Engineer on a Dayworks basis.
The Contractor shall include prices for all items in the Schedule of Rates, in the Dayworks Bill, and shall carry out work using these rates only if directed by the Engineer.
Measurement and Payment

a. Equipment:

Payment for equipment shall only be made for the time each item of equipment is working. Idle time due to breakdown or incompleteness of the equipment shall not be paid. The rate of equipment shall include for the cost of the following: -

i. Transport of the equipment to the site
ii. Operators, drivers and assistants including their overtime
iii. Fuels and lubricants
iv. Maintenance, spare parts and all costs of repairs
v. Depreciation, insurance, overheads and profits.

b. Labour

Payment shall only be made for the time each of worker working on the Dayworks as instructed by the Engineer. The rate for labour shall include the cost of,

i. All wages, allowances and other payments due to the worker
ii. Provision of small tools used on Dayworks activities by labourers and tradesmen.
iii. Insurance, overheads and profit.

c. Materials

Payment shall only be made for materials instructed by the Engineer for use in Dayworks activities. The rate for materials shall include for the cost of provision of the material, transport to site, storage, handling, overheads and profits.

Schedule of Dayworks

The Engineer shall compile a Schedule of the Equipment, Labour and Materials which may apply to Dayworks activities, to be included in the Dayworks Bill.

BILL 25: HIV/AIDS AWARENESS AND PREVENTION CAMPAIGN

This BILL sets out the Contractor's obligations with regard to on-site HIV / AIDS awareness campaign and preventive measures that are to be instituted.

25-50-01 HIV / AIDS Awareness and Prevention Campaign

The Contractor shall institute an HIV / AIDS awareness and prevention campaign amongst his workers for the duration of the Contract. The awareness campaigns shall be carried out in consultation and guidance of Ministry of Public Health or Local service providers approved by the Ministry of Public Health.

The Contractor shall display AIDS awareness posters in all buildings frequented by workers employed on the Contract, where such buildings fall under the control of the Contractor.

In addition at least two of the Contractors vehicles regularly used on site shall display HIV / AIDS awareness posters. The posters shall be printed on gloss paper and shall be at least A1 size on buildings and A3 size or other approved size on vehicles. The message on the posters shall be supplied by the Employer through the Engineer.
Aids awareness shall also be included in the orientation process of all workers employed on the Contract. As part of the campaign the Contractor will be required to make condoms available to his workers.
Measurement Unit: month

The measurement shall be the calendar month or part thereof, measured over the duration of the campaign.

Payment:

The rate shall include full compensation for equipment; labour and material required for the provision of the item.

25-50-02 Soil Erosion Mitigation Measures

Soil Erosion problems must be identified and appropriate mitigation measures included during the preparation of the contract document. However the Engineer shall provide a Provisional Sum for Soil Erosion Mitigation Measures that were foreseen during the preparation of the document.
Measurement

A Provisional Sum shall be included in the Bill of Quantities for this item.

25-50-03 Baraza's for Cross-cutting Issues

The Contractor shall arrange and conduct meetings and/or training sessions for workers and staff on cross-cutting issues, including Community Participation, Environmental Mitigation, Gender Rights, HIV/AIDS, Workers Rights at times and locations directed by the Engineer.

Measurement

A Provisional Sum shall be included in the Bill of Quantities for this item payable on documented expenditure.

SECTION VII - DRAWINGS

Note: A list of drawings should be inserted here. The actual drawings including Site plans should be annexed in a separate booklet.

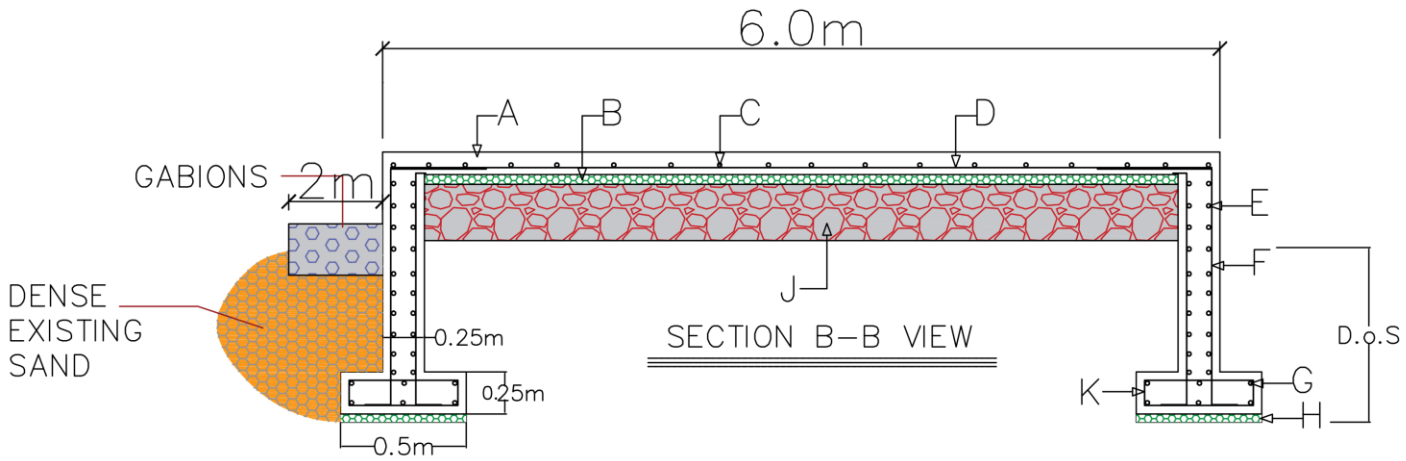

KEY	
A	200mm (C25/20) Top slab concrete
B	50mm (C15) Blinding concrete
C	H10–01–250 C/C
D	H12–02–200 C/C
E	H10–03–200 C/C

KEY	
F	H12–04–200 C/C
G	3H12–05 TOP & BOTTOM
H	50mm (C15) Blinding concrete
J	600mm Hardcore fill well compacted
K	H10–06–250 C/C

NB: nNO. INTERMEDIATE TIE WALLS SPACED AT 12M BE PROVIDED

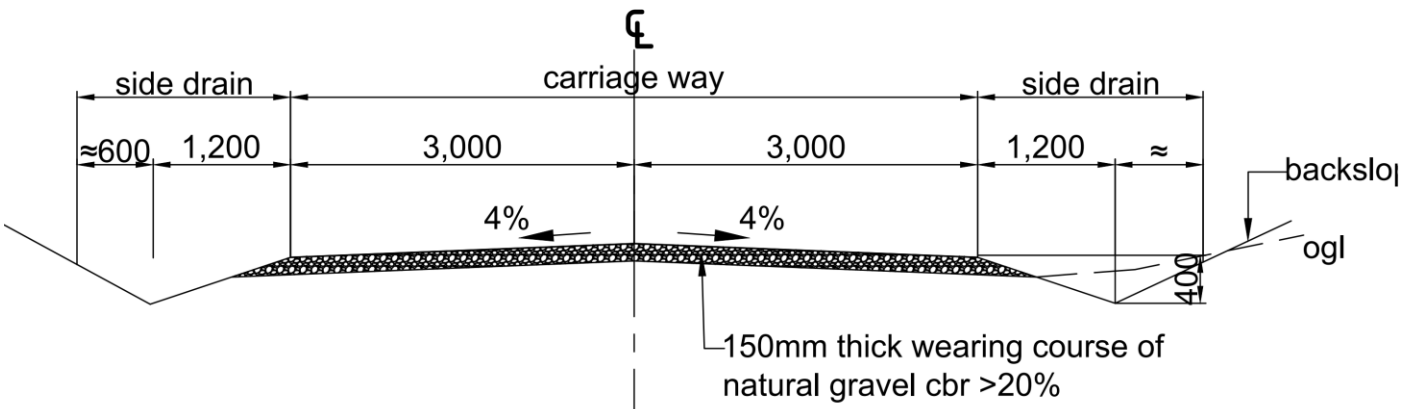

STANDRAD ROAD CROSS-SECTION

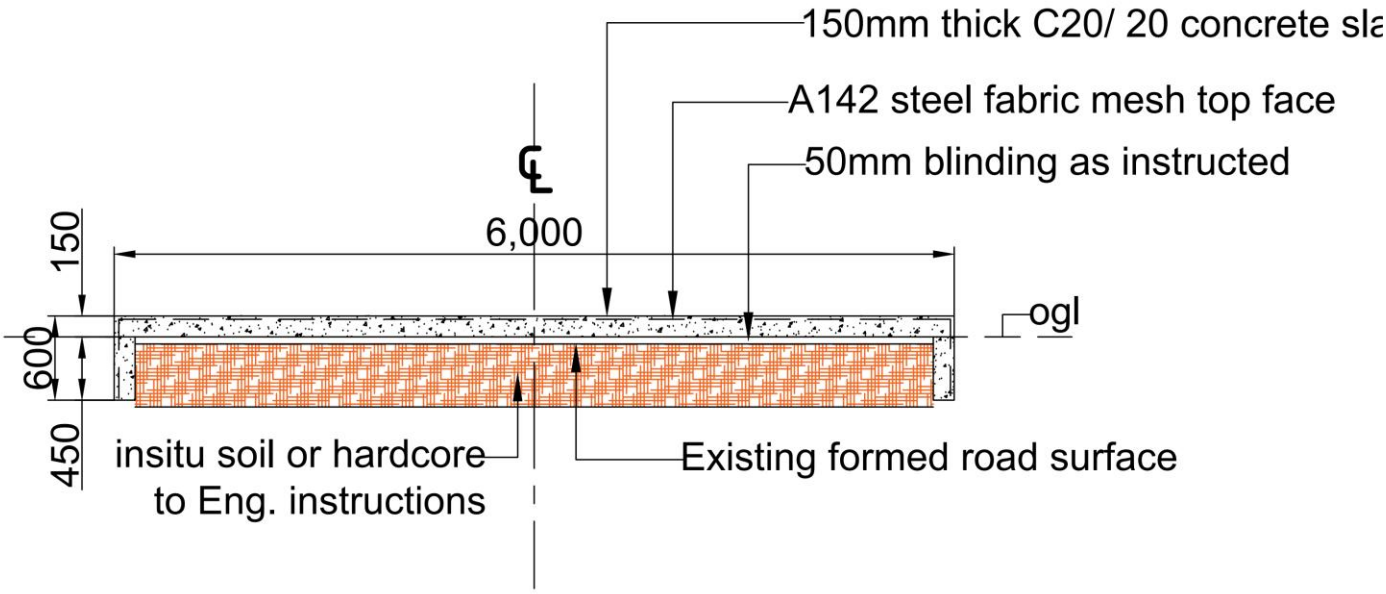

CONCRETE SLAB ROAD SECTION

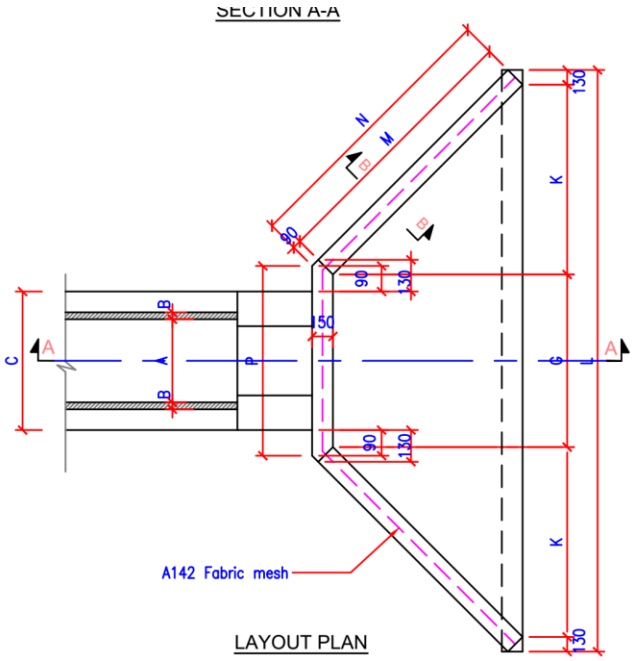

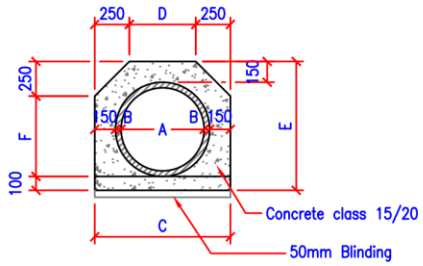

TYPICAL CONCRETE BED AND SURROUND - SINGLE CELL

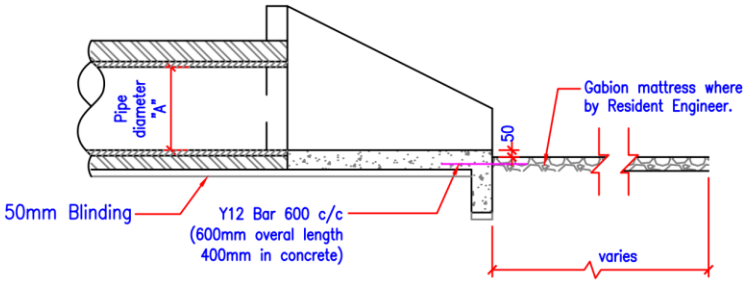

SECTION A-A (with gabion mattress shown)

TABLE A - 1-CELL CONCRETE PIPE CULVERTS

CULVERT	A (m)	B (m)	C (m)	D (m)	E (m)	F (m)	G (m)	H (m)	J (m)	K (m)	L (m)	M (m)	N (m)	P (m)	CONCRETE CLASS 25/20 Inlet & Outlet	CONCRETE CLASS 15/20 Surround & Bed per running m
Diameter 0.60m	0.60	0.05	1.00	0.50	0.95	0.60	1.20	0.95	1.25	0.72	3.00	1.44	1.53	1.18	1.58m^3	0.50m^3
Diameter 0.90m	0.90	0.09	1.38	0.88	1.33	0.98	1.50	1.25	2.25	1.30	4.54	2.60	2.69	1.56	4.07m^3	0.86m^3
Diameter 1.20m	1.20	0.10	1.80	1.30	1.70	1.35	1.80	1.55	2.85	1.65	5.56	3.29	3.38	1.88	5.92 m^3	1.46 m^3

SUPPLEMENTARY INFORMATION

PART 3 – CONDITIONS OF CONTRACT AND CONTRACT FORMS

Section VIII - General Conditions of Contract 1. GENERAL CONDITIONS

1. General Provisions

1.1 Definitions

In the Conditions of Contract ("these Conditions"), which include Particular Conditions, Parts A and B, and these General Conditions, the following words and expressions shall have the meanings stated. Words indicating persons or parties include corporations and other legal entities, except where the context requires otherwise.

1.1.1 The Contract

"Bills of Quantities", "Daywork Schedule" and "Schedule of Payment Currencies" mean the documents so named (if any) which are comprised in the Schedules.

"Contract Agreement" means the contract agreement referred to in Sub-Clause 1.6 [Contract Agreement].

"Contract" means the Contract Agreement, the Letter of Acceptance, the Letter of Tender, these Conditions, the Specification, the Drawings, the Schedules, and the further documents (if any) which are listed in the Contract Agreement or in the Letter of Acceptance.

"Drawings" means the drawings of the Works, as included in the Contract, and any additional and modified drawings issued by (or on behalf of) the Procuring Entity in accordance with the Contract.

"Laws" means all national legislation, statutes, ordinances, and regulations and by-laws of any legally constituted public authority.

"Letter of Acceptance" means the letter of formal acceptance, signed by the contractor and the Procuring Entity, including any annexed memoranda comprising agreements between and signed by both Parties.

"Letter of Tender" means the document entitled letter of tender or letter of tender, which was completed by the Contractor and includes the signed offer to the Procuring Entity for the Works.

"SCC" **means the Special Conditions of Contract completed by the Procuring Entity which modify the General Conditions of Contract.**

"Schedules" means the document(s) entitled schedules, completed by the Contractor and submitted with the Letter of Tender, as included in the Contract. Such document may include the Bills of Quantities, data, lists, and schedules of rates and/or prices.

"Specification" means the document entitled specification, as included in the Contract, and any additions and modifications to the specification in accordance with the Contract. Such document specifies the Works.

"Tender" means the Letter of Tender and all other documents which the Contractor submitted with the Letter of Tender, as included in the Contract.

1.1.2 Parties and Persons

"Contractor's Personnel" means the Contractor's Representative and all personnel whom the Contractor utilizes on Site, who may include the staff, labor and other employees of the Contractor and of each Subcontractor; and any other personnel assisting the Contractor in the execution of the Works.

"Contractor's Representative" means the person named by the Contract or in the Contractor appointed from time to time by the Contractor under Sub-Clause 4.3 [Contractor's Representative], who acts on behalf of the Contractor.

"Contractor" means the person(s) named as contractor in the Letter of Tender accepted by the Procuring Entity and the legal successors in title to this person(s).

"Engineer" means the person appointed by the Procuring Entity to act as the Engineer for the purposes of the Contract and named in the **SCC**, or other person appointed from time to time by the Procuring Entity and notified to the Contractor under Sub-Clause 3.4 [Replacement of the Engineer].
"Party" means the Procuring Entity or the Contractor, as the context requires.

“Procuring Entity” means the Entity named in the Special Conditions of Contract.

“Procuring Entity's Personnel” means the Engineer, the assistants referred to in Sub-Clause 3.2 [Delegation by the Engineer] and all other staff, labor and other employees of the Engineer and of the Procuring Entity; and any other personnel notified to the Contractor, by the Procuring Entity or the Engineer, as Procuring Entity's Personnel.

“Procuring Entity” means the person named as Procuring Entity in the **SCC** and the legal successors in title to this person.

“Subcontractor” means any person named in the Contract as a subcontractor, or any person appointed as a subcontractor, for a part of the Works; and the legal successors in title to each of these persons.

1.1.3 Dates, Tests, Periods and Completion

“Base Date” means a date 30 day prior to the submission of tenders.

“Commencement Date” means the date notified under Sub-Clause 8.1 [Commencement of Works].

“Completion Certificate” means the certificate issued under Sub-Clause 11.9 [Performance

Certificate]. **“Day”** means a calendar day and “year” means 365 days.

“Defects Notification Period” means the period for notifying defects in the Works or a Section (as the case may be) under Sub-Clause 11.1 [Completion of Outstanding Work and Remedying Defects], which extends over 365 days except if otherwise stated in the **SCC** (with any extension under Sub-Clause 11.3 [Extension of Defects Notification Period]), calculated from the date on which the Works or Section is completed as certified under Sub-Clause 10.1[Taking Over of the Works and Sections].

“Taking-Over Certificate” means a certificate issued under Clause 10 [Procuring Entity's Taking Over].

“Tests after Completion” means the tests (if any) which are specified in the Contract and which are carried out in accordance with the Specification after the Works or a Section (as the case may be) are taken over by the Procuring Entity.

“Tests on Completion” means the tests which are specified in the Contract or agreed by both Parties or instructed as a Variation, and which are carried out under Clause 9 [Tests on Completion] before the Works or a Section (as the case may be) are taken over by the Procuring Entity.

“Time for Completion” means the time for completing the Works or a Section (as the case may be) under Sub- Clause 8.2 [Time for Completion], as stated in the **SCC** (with any extension under Sub-Clause 8.4 [Extension of Time for Completion]), calculated from the Commencement Date.

1.1.4 Money and Payments

“Accepted Contract Amount” means the amount accepted in the Letter of Acceptance for the execution and completion of the Works and the remedying of any defects.

“Contract Price” means the price defined in Sub-Clause 14.1 [The Contract Price] and includes adjustments in accordance with the Contract.

“Cost” means all expenditure reasonably incurred (or to be incurred) by the Contractor, whether on or off the Site, including overhead and similar charges, but does not include profit.

“Final Payment Certificate” means the payment certificate issued under Sub-Clause 14.13 [Issue of Final Payment Certificate].

“Final Statement” means the statement defined in Sub-Clause 14.11 [Application for Final Payment

Certificate].
"Foreign Currency" means a currency in which part (oral) of the Contract Price is payable, but not the Local Currency.

"Interim Payment Certificate" means a payment certificate issued under Clause 14 [Contract Price and Payment], other than the Final Payment Certificate.

"Local Currency" means the currency of the Country.

"Payment Certificate" means a payment certificate issued under Clause 14 [Contract Price and Payment].

"Provisional Sum" means a sum (if any) which is specified in the Contract as a provisional sum, for the execution of any part of the Works or for the supply of Plant, Materials or services under Sub-Clause 13.5 [Provisional Sums].

"Retention Money" means the accumulated retention moneys which the Procuring Entity retains under Sub-Clause 14.3 [Application for Interim Payment Certificates] and pays under Sub-Clause 14.9 [Payment of Retention Money].

"Statement" means a statement submitted by the Contractor as part of an application, under Clause 14 [Contract Price and Payment], for a payment certificate.

1.1.5 Works and Goods

"Contractor's Equipment" means all apparatus, machinery, vehicles and other things required for the execution and completion of the Works and the remedying of any defects. However, Contractor's Equipment excludes Temporary Works, Procuring Entity's Equipment (if any), Plant, Materials and any other things intended to form or forming part of the Permanent Works.

"Goods" means Contractor's Equipment, Materials, Plant and Temporary Works, or any of them as appropriate.

"Materials" means things of all kinds (other than Plant) intended to form or forming part of the Permanent Works, including the supply-only materials (if any) to be supplied by the Contractor under the Contract.

"Permanent Works" means the permanent works to be executed by the Contractor under the Contract.

"Plant" means the apparatus, machinery and other equipment intended to form or forming part of the Permanent Works, including vehicles purchased for the Procuring Entity and relating to the construction or operation of the Works.

"Section" means a part of the Works specified in the **SCC** as a Section (if any).

"Temporary Works" means all temporary works of every kind (other than Contractor's Equipment) required on Site for the execution and completion of the Permanent Works and the remedying of any defects.

"Works" mean the Permanent Works and the Temporary Works, or either of them as appropriate.

1.1.6 Other Definitions

"Contractor's Documents" means the calculations, computer programs and other software, drawings, manuals, models and other documents of a technical nature (if any) supplied by the Contractor under the Contract.

"Country" means Kenya as the country in which the Site is located, where the Permanent Works are to be executed.

"Force Majeure" is defined in Clause 19 [Force Majeure].

"Laws" means all national (or state) legislation, statutes, ordinances and other laws, and regulations and by-laws of any legally constituted public authority.

"Notice of Dissatisfaction" means the notice given by either Party to the other under Sub-Clause 20.4 indicating its dissatisfaction and intention to commence arbitration.

"Performance Security" means the security (or securities, if any) under Sub-Clause 4.2 [Performance Security].

"Procuring Entity's Equipment" means the apparatus, machinery and vehicles (if any) made available by the Procuring Entity for the use of the Contractor in the execution of the Works, as stated in the Specification; but does not include Plant which has not been taken over by the Procuring Entity.

"Site" means the places where the Permanent Works are to be executed, including storage and working areas, and to which Plant and Materials are to be delivered, and any other places as may be specified in the Contract as forming part of the Site.

"Unforeseeable" means not reasonably foreseeable by an experienced contractor by the Base Date.

"Variation" means any change to the Works, which is instructed or approved as a variation under Clause 13 [Variations and Adjustments].

1.2 Interpretation

In the Contract, except where the context requires otherwise:

a) Words indicating one gender include all genders;

b) words indicating the singular also include the plural and words indicating the plural also include the singular;

c) provisions including the word "agree", "agreed" or "agreement" require the agreement to be recorded in writing;

d) "written" or "inwriting" means hand-written, type-written, printed or electronically made, and resulting in a permanent record; and

e) the word "tender" is synonymous with "tender" and "tenderer" with "Tenderer" and the words "tender documents" with "tendering documents."

1.3 Communications

1.3.1 Wherever these Conditions provide for the giving or issuing of approvals, certificates, consents, determinations, notices, requests and discharges, these communications shall be:

a) In writing and delivered by hand (against receipt), sent by mail or courier, or transmitted using any of the agreed systems of electronic transmission as stated in the **SCC**; and

b) Delivered, sent or transmitted to the address for the recipient's communications as stated in the **SCC**. However:

   i) if the recipient gives notice of another address, communications shall thereafter be delivered accordingly; and

   ii) if the recipient has not stated otherwise when requesting an approval or consent, it may be sent to the address from which the request was issued.

1.3.2 Approvals, certificates, consents and determinations shall not be unreasonably withheld or delayed. When a certificate is issued to a Party, the certifier shall send a copy to the other Party. When a notice is issued to a Party, by the other Party or the Engineer, a copy shall be sent to the Engineer or the other Party, as the case may be.

1.4 Law and Language

1.4.1 The Contract shall be governed by the **laws of Kenya**.

1.4.2 The ruling language of the Contract shall be the **English Language.**

1.5 Priority of Documents

1.5.1 The documents forming the Contract are to be taken as mutually explanatory of one another. For the purposes of interpretation, the priority of the documents shall be in accordance with the following sequence:

a) The Contract Agreement,

b) The Letter of Acceptance,

c) the Particular Conditions–Part A,
d) the Particular Conditions–Part B
e) the General Conditions of Contract
f) the Form of Tender,
g) the Specifications and Bills of Quantities
h) the Drawings, and
i) the Schedules and any other documents forming part of the Contract.

1.5.2 If an ambiguity or discrepancy is found in the documents, the Engineer shall issue any necessary clarification or instruction.

1.6 Contract Agreement

The Parties shall enter into a Contract Agreement within 14 days after the Contractor receives the Letter of Acceptance, unless the Particular Conditions establish otherwise. The Contract Agreement shall be based upon the form annexed to the Particular Conditions. The costs of stamp duties and similar charges (if any) imposed by law in connection with entry into the Contract Agreement shall be borne by the Procuring Entity.

1.7 Assignment

Neither Party shall assign the whole or any part of the Contract or any benefit or interest in or under the Contract. However, either Party:

a) May assign the whole or any part with the prior agreement of the other Party, at the sole discretion of such other Party, and
b) May, as security in favor of a Procuring Entity or financial institution, assign its right to any moneys due, or to become due, under the Contract.

1.8 Care and Supply of Documents

1.8.1 The Specification and Drawings shall be in the custody and care of the Procuring Entity. Unless otherwise stated in the Contract, two copies of the Contract and of each subsequent Drawing shall be supplied to the Contractor, who may make or request further copies at the cost of the Contractor.

1.8.2 Each of the Contractor's Documents shall be in the custody and care of the Contractor, unless and until taken over by the Procuring Entity. Unless otherwise stated in the Contract, the Contractor shall supply to the Engineer

1.8.3 The Contractor shall keep, on the Site, a copy of the Contract, publications named in the Specification, the Contractor's Documents (if any), the Drawings and Variations and other communications given under the Contract. The Procuring Entity's Personnel shall have the right of access to all these documents at all reasonable times.

1.8.4 If a Party becomes aware of an error or defect in a document which was prepared for use in executing the Works, the Party shall promptly give notice to the other Party of such error or defect.

1.9 Delayed Drawings or Instructions

1.9.1 The Contractor shall give notice to the Engineer whenever the Works are likely to be delayed or disrupted if any necessary drawing or instruction is not issued to the Contractor within a particular time, which shall be reasonable. The notice shall include details of the necessary drawing or instruction, details of why and by when it should be issued, and the nature and amount of the delay or disruption likely to be suffered if it is late.

If the Contractor suffers delay and/or incurs Cost as a result of a failure of the Engineer to issue the notified drawing or instruction within a time which is reasonable and is specified in the notice with supporting details, the Contractor shall give a further notice to the Engineer and shall be entitled subject to Sub-Clause 20.1 [Contractor's Claims] to:

a) an extension of time for any such delay, if completion is or will be delayed, under Sub-Clause 8.4 [Extension of Time for Completion], and
b) payment of any such Cost-plus profit, which shall be included in the Contract Price.

1.9.2 After receiving this further notice, the Engineer shall proceed in accordance with Sub-Clause 3.5 [Determinations] to agree or determine these matters.

1.9.3 However, if and to the extent that the Engineer's failure was caused by any error or delay by the Contractor, including an error in, or delay in the submission of, any of the Contractor's Documents, the Contractor shall not be entitled to such extension of time, Cost or profit.

1.10 Procuring Entity's Use of Contractor's Documents

1.10.1 As between the Parties, the Contractor shall retain the copyright and other intellectual property rights in the Contractor's Documents and other design documents made by (or on behalf of) the Contractor. The Contractor shall be deemed (by signing the Contract) to give to the Procuring Entity a non-terminable transferable non-exclusive royalty-free license to copy, use and communicate the Contractor's Documents, including making and using modifications of them. This license shall:

a) apply throughout the actual or intended working life (whichever is longer) of the relevant parts of the Works,

b) entitle any person in proper possession of the relevant part of the Works to copy, use and communicate the Contractor's Documents for the purposes of completing, operating, maintaining, altering, adjusting, repairing and demolishing the Works, and

c) in the case of Contractor's Documents which are in the form of computer programs and other software, permit their use on any computer on the Site and other places as envisaged by the Contract, including replacements of any computers supplied by the Contractor.

1.10.2 The Contractor's Documents and other design documents made by (or on behalf of) the Contractor shall not, without the Contractor's consent, be used, copied or communicated to a third party by (or on behalf of) the Procuring Entity for purposes other than those permitted under this Sub-Clause.

1.11 Contractor's Use of Procuring Entity's Documents

As between the Parties, the Procuring Entity shall retain the copyright and other intellectual property rights in the Specification, the Drawings and other documents made by (or on behalf of) the Procuring Entity. The Contractor may, at his cost, copy, use, and obtain communication of these documents for the purposes of the Contract. They shall not, without the Procuring Entity's consent, be copied, used or communicated to a third party by the Contractor, except as necessary for the purposes of the Contract.

1.12 Confidential Details

The Contractor's and the Procuring Entity's Personnel shall disclose all such confidential and other information as may be reasonably required in order to verify compliance with the Contract and allow its proper implementation.

1.13 Compliance with Laws

The Contractor shall, in performing the Contract, comply with applicable Laws. Unless otherwise stated in the Particular Conditions:

a) The Procuring Entity shall have obtained (or shall obtain) the planning, zoning, building permit or similar permission for the Permanent Works, and any other permissions described in the Specification as having been (or to be) obtained by the Procuring Entity; and the Procuring Entity shall indemnify and hold the Contractor harmless against and from the consequences of any failure to do so; and

b) the Contractor shall give all notices, pay all taxes, duties and fees, and obtain all permits, licenses and approvals, as required by the Laws in relation to the execution and completion of the Works and the remedying of any defects; and the Contractor shall indemnify and hold the Procuring Entity harmless against and from the consequences of any failure to do so, unless the Contractor is impeded to accomplish these actions and shows evidence of its diligence.

1.14 Joint and Several Liability

If the Contractor constitutes (under applicable Laws) a joint venture, consortium or other unincorporated grouping of two or more persons:

a) These persons shall be deemed to be jointly and severally liable to the Procuring Entity for the performance of the Contract;

b) these persons shall notify the Procuring Entity of their leader who shall have authority to bind the Contractor and each of these persons; and

c) the Contractor shall not alter its composition or legal status without the prior consent of the Procuring Entity.

1.15 Inspections and Audit by the Procuring Entity

Pursuant to paragraph 2.2 e. of Appendix B to the General Conditions, the Contractor shall permit and shall cause its subcontractors and sub-consultants to permit, the Procuring Entity and/or persons appointed by the Procuring Entity to inspect the Site and/or the accounts and records relating to the procurement process, selection and/or contract execution, and to have such accounts and records audited by auditors appointed by the Procuring Entity if requested by the Procuring Entity. The Contractor's and its Subcontractors' and sub-consultants' attention is drawn to Sub-Clause15.6 (Fraud and Corruption) which provides, inter alia, that acts intended to materially impede the exercise of the Procuring Entity's inspection and audit rights constitute a prohibited practice subject to contract termination (as well as to a determination of ineligibility pursuant to the Procuring Entity's prevailing sanctions procedures).

2. THE PROCURING ENTITY

2.1 Right of Access to the Site

2.1.1 The Procuring Entity shall give the Contractor right of access to, and possession of, all parts of the Site within the time (or times) stated in the **SCC**. The right and possession may not be exclusive to the Contractor. If, under the Contract, the Procuring Entity is required to give (to the Contractor) possession of any foundation, structure, plant or means of access, the Procuring Entity shall do so in the time and manner stated in the Specification. However, the Procuring Entity may withhold any such right or possession until the Performance Security has been received.

2.1.2 If no such time is stated in the **SCC**, the Procuring Entity shall give the Contractor right of access to, and possession of, the Site within such times as required to enable the Contractor to proceed without disruption in accordance with the programme submitted under Sub-Clause 8.3 [Programme].

2.1.3 If the Contractor suffers delay and/or incurs Cost as a result of a failure by the Procuring Entity to give any such right or possession within such time, the Contractor shall give notice to the Engineer and shall been titled subject toSub-Clause20.1 [Contractor's Claims] to:

a) an extension of time for any such delay, if completion is or will be delayed, under Sub-Clause 8.4 [Extension of Time for Completion], and

b) payment of any such Cost-plus profit, which shall be included in the Contract Price.

2.1.4 After receiving this notice, the Engineer shall proceed in accordance with Sub-Clause3.5 [Determinations] to agree or determine these matters.

2.1.5 However, if and to the extent that the Procuring Entity's failure was caused by any error or delay by the Contractor, including an error in, or delay in the submission of, any of the Contractor's Documents, the Contractor shall not be entitled to such extension of time, Cost or profit.

2.2 Permits, Licenses or Approvals

The Procuring Entity shall provide, at the request of the Contractor, such reasonable assistance as to allow the Contractor to obtain properly:

a) Copies of the Laws of the Country which are relevant to the Contract but are not readily available, and

b) Any permits, licenses or approvals required by the Laws of the Country:

i) Which the Contractor is required to obtain under Sub-Clause 1.13 [Compliance with Laws],

ii) For the delivery of Goods, including clearance through customs, and

iii) For the export of Contractor's Equipment when it is removed from the Site.

2.3 Procuring Entity's Personnel

The Procuring Entity shall be responsible for ensuring that the Procuring Entity's Personnel and the Procuring Entity's other contractors on the Site:

a) co-operate with the Contractor's efforts under Sub-Clause 4.6 [Co-operation], and

b) take actions similar to those which the Contractor is required to take under sub-paragraphs (a), (b) and (c) of Sub-Clause 4.8 [Safety Procedures] and under Sub-Clause 4.18 [Protection of the Environment].

2.4 Procuring Entity's Financial Arrangement

2.4.1 The Procuring Entity shall submit, before the Commencement Date and there after within 30 days after receiving any request from the Contractor, reasonable evidence that financial arrangements have been made and are being maintained which will enable the Procuring Entity to pay the Contract Price punctually (as estimated at that time) in accordance with Clause 14 [Contract Price and Payment]. Before the Procuring Entity makes any material change to his financial arrangements, the Procuring Entity shall give notice to the Contractor with detailed particulars.

2.4.2 In addition, if the Procuring Entity has notified to the Contractor that the Procuring Entity has suspended disbursements under its loan, which finances in whole or in part the execution of the Works, the Procuring Entity shall give notice of such suspension to the Contractor with detailed particulars, including the date of such notification, with a copy to the 2.4.3 Engineer, within 7 days of the Procuring Entity having received the suspension notification from the Procuring Entity. If alternative funds will be available in appropriate currencies to the Procuring Entity to continue making payments to the Contractor beyond a date 60 day after the date of Procuring Entity notification of the suspension, the Procuring Entity shall provide reasonable evidence in his notice of the extent to which such funds will be available.

2.5 Procuring Entity's Claims

2.5.1 If the Procuring Entity considers itself to be entitled to any payment under any Clause of these Conditions or otherwise in connection with the Contract, and/or to any extension of the Defects Notification Period, the Procuring Entity or they shall give notice and particulars to the Contractor. However, notice is not required for payments due under Sub-Clause 4.19 [Electricity, Water and Gas], under Sub-Clause 4.20 [Procuring Entity's Equipment and Free-Issue Materials], or for other services requested by the Contractor.

2.5.2 The notice shall be given as soon as practicable and no longer than 30 days after the Procuring Entity became aware, or should have become aware, of the event or circumstances giving rise to the claim. A notice relating to any extension of the Defects Notification Period shall be given before the expiry of such period.

2.5.3 The particulars shall specify the Clause or other basis of the claim and shall include substantiation of the amount and/or extension to which the Procuring Entity considers itself to be entitled in connection with the Contract. The Engineer shall then proceed in accordance with Sub-Clause 3.5 [Determinations] to agree or determine (i) the amount (if any) which the Procuring Entity is entitled to be paid by the Contractor, and/or(ii) the extension (if any) of the Defects Notification Period in accordance with Sub-Clause 11.3 [Extension of Defects Notification Period].

3. THE ENGINEER

3.1 Engineer's Duties and Authority

3.1.1 The Procuring Entity shall appoint the Engineer who shall carry out the duties assigned to him in the Contract. The Engineer's staff shall include suitably qualified engineers and other professionals who are competent to carry out these duties.

The Engineer shall have no authority to amend the Contract.
The Engineer may exercise the authority attributable to the Engineer as specified in or necessarily to be implied from the Contract. If the Engineer is required to obtain the approval of the Procuring Entity before exercising a specified authority, the requirements shall be as stated in the Particular Conditions. The Procuring Entity shall promptly inform the Contractor of any change to the authority attributed to the Engineer.

3.1.2 However, whenever the Engineer exercises a specified authority for which the Procuring Entity's approval is required, then (for the purposes of the Contract) the Procuring Entity shall be deemed to have given approval. Except as otherwise stated in these Conditions:

a) Whenever carrying out duties or exercising authority, specified in or implied by the Contract, the Engineer shall be deemed to act for the Procuring Entity; the Engineer has no authority to relieve either Party of any duties, obligations or
b) any approval, check, certificate, consent, examination, inspection, instruction, notice, proposal, request, test, or similar act by the Engineer (including absence of disapproval) shall not relieve the Contractor from any responsibility he has under the Contract, including responsibility for errors, omissions,

discrepancies and non-compliances; and

c) any act by the Engineer in response to a Contractor's request except as otherwise expressly specified shall be notified in writing to the Contractor within 14 days of receipt.

3.1.2 The following provisions shall apply; The Engineer shall obtain the specific approval of the Procuring Entity before taking action under the-following Sub-Clauses of these Conditions:

a) Sub-Clause 4.12: agreeing or determining an extension of time and/or additional cost.

b) Sub-Clause13.1: instructing a Variation, except;

i) In an emergency situation as determined by the Engineer, or

ii) If such a Variation would increase the Accepted Contract Amount by less than the percentage specified in the **SCC**.

c) Sub-Clause13.3: Approving a proposal for Variation submitted by the Contractor in accordance with Sub Clause13.1or13.2.

d) Sub-Clause13.4: Specifying the amount payable in each of the applicable currencies.

3.1.3 Notwithstanding the obligation, as set out above, to obtain approval, if, in the opinion of the Engineer, an emergency occurs affecting the safety of life or of the Works or of adjoining property, he may, without relieving the Contractor of any of his duties and responsibility under the Contract, instruct the Contract or to execute all such work or to do all such things as may, in the opinion of the Engineer, be necessary to abate or reduce the risk. The Contractor shall forthwith comply, despite the absence of approval of the Procuring Entity, with any such instruction of the Engineer. The Engineer shall determine an addition to the Contract Price, in respect of such instruction, in accordance with Clause 13 and shall notify the Contractor accordingly, with a copy to the Procuring Entity.

3.2 Delegation by the Engineer

3.2.1 The Engineer may from time to time assign duties and delegate authority to assistants, and may also revoke such assignment or delegation. These assistants may include a resident engineer, and/or independent inspectors appointed to inspect and/or test items of Plant and/or Materials. The assignment, delegation or revocation shall be in writing and shall not take effect until copies have been received by both Parties. However, unless otherwise agreed by both Parties, the Engineer shall not delegate the authority to determine any matter in accordance with Sub-Clause3.5 [Determinations].

3.2.2 Each assistant, to whom duties have been assigned or authority has been delegated, shall only be authorized to issue instructions to the Contractor to the extent defined by the delegation. Any approval, check, certificate, consent, examination, inspection, instruction, notice, proposal, request, test, or similar act by an assistant, in accordance with the delegation, shall have the same effect as though the act had been an act of the Engineer. However:

a) Any failure to disapprove any work, Plant or Materials shall not constitute approval, and shall therefore not prejudice the right of the Engineer to reject the work, Plant or Materials;

b) If the Contractor questions any determination or instruction of an assistant, the Contractor may refer the matter to the Engineer, who shall promptly confirm, reverse or vary the determination or instruction.

3.3 Instructions of the Engineer

3.3.1 The Engineer may issue to the Contractor (at any time) instructions and additional or modified Drawings which may be necessary for the execution of the Works and the remedying of any defects, all in accordance with the Contract. The Contractor shall only take instructions from the Engineer, or from an assistant to whom the appropriate authority has been delegated under this Clause. If an instruction constitutes a Variation, Clause 13 [Variations and Adjustments] shall apply.

3.3.2 The Contractor shall comply with the instructions given by the Engineer or delegated assistant, on any matter related to the Contract. Whenever practicable, their instructions shall be given in writing. If the Engineer or a delegated assistant:

a) Gives an oral instruction,

b) Receives a written confirmation of the instruction, from (or on behalf of) the Contractor, within two working days after giving the instruction, and

c) Does not reply by issuing a written rejection and/or instruction within two working days after receiving the confirmation, then the confirmation shall constitute the written instruction of the Engineer or delegated assistant (as the case may be).

3.4 Replacement of the Engineer

If the Procuring Entity intends to replace the Engineer, the Procuring Entity shall, not less than 21 days before the intended date of replacement, give notice to the Contractor of the name, address and relevant experience of the intended replacement Engineer. If the Contractor considers the intended replacement Engineer to be unsuitable, he has the right to raise objection against him by notice to the Procuring Entity, with supporting particulars, and the Procuring Entity shall give full and fair consideration to this objection.

3.5 Determinations

3.5.1 Whenever these Conditions provide that the Engineer shall proceed in accordance with this Sub-Clause 3.5 to agree or determine any matter, the Engineer shall consult with each Party in an endeavor to reach agreement. If agreement is not achieved, the Engineer shall make a fair determination in accordance with the Contract, taking due regard of all relevant circumstances.

3.5.2 The Engineer shall give notice to both Parties of each agreement or determination, with supporting particulars, within 30 days from the receipt of the corresponding claim or request except when otherwise specified. Each Party shall give effect to each agreement or determination unless and until revised under Clause 20 [Claims, Disputes and Arbitration].

4. THE CONTRACTOR

4.1 Contractor's General Obligations

4.1.1 The Contractor shall design (to the extent specified in the Contract), execute and complete the Works in accordance with the Contract and with the Engineer's instructions, and shall remedy any defects in the Works.

4.1.2 The Contractor shall provide the Plant and Contractor's Documents specified in the Contract, and all Contractor's Personnel, Goods, consumables and other things and services, whether of a temporary or permanent nature, required in and for this design, execution, completion and remedying of defects.

4.1.3 All equipment, material, and services to be incorporated in or required for the Works shall have their origin in any eligible source country as defined by the Procuring Entity.

4.1.4 The Contractor shall be responsible for the adequacy, stability and safety of all Site operations and of all methods of construction. Except to the extent specified in the Contract, the Contractor (i) shall be responsible for all Contractor's Documents, Temporary Works, and such design of each item of Plant and Materials as is required for the item to be in accordance with the Contract, and (ii) shall not otherwise be responsible for the design or specification of the Permanent Works.

4.1.5 The Contractor shall, whenever required by the Engineer, submit details of the arrangements and methods which the Contractor proposes to adopt for the execution of the Works. No significant alteration to these arrangements and methods shall be made without this having previously been notified to the Engineer.

4.1.6 The Contractor shall not commence any Works, including mobilization and/or pre-construction activities (e.g. limited clearance for haul roads, site accesses and work site establishment, geotechnical investigations or investigations to select ancillary features such as quarries and borrow pits), unless the Engineer is satisfied that appropriate measures are in place to address environmental, social, health and safety risks and impacts.

4.1.7 If the Contract specifies that the Contract or shall design any part of the Permanent Works, then unless otherwise stated in the Particular Conditions:

a) The Contractor shall submit to the Engineer the Contractor's Documents for this part in accordance with the procedures specified in the Contract;

b) These Contractor's Documents shall be in accordance with the Specification and Drawings, shall be written in the language for communications defined in Sub-Clause 1.4 [Law and Language], and shall include additional information required by the Engineer to add to the Drawings for co-ordination of each Party's designs;

c) The Contractor shall be responsible for this part and it shall, when the Works are completed, be fit for such purposes for which the part is intended as are specified in the Contract; and

d) Prior to the commencement of the Tests on Completion, the Contractor shall submit to the Engineer the "as- built" documents and, if applicable, operation and maintenance manuals in accordance with the Specification and insufficient detail for the Procuring Entity to operate, maintain, dismantle, reassemble, adjust and repair this part of the Works. Such part shall not be considered to be completed for the purposes

of taking-over under Sub-Clause 10.1 [Taking Over of the Works and Sections] until these documents and manuals have been submitted to the Engineer.

4.2 Performance Security

4.2.1 Performance security shall not be required for contracts estimated to cost less than Kenya shillings five million shillings.

4.2.2 The Contractor shall obtain (at his cost) a Performance Security for proper performance, in the amount stated in the **SCC** and denominated in the currency (ies) of the Contractor in a freely convertible currency acceptable to the Procuring Entity. If an amount is not stated in the **SCC,** this Sub-Clause shall not apply.

4.2.3 The Contractor shall deliver the Performance Security to the Procuring Entity within 14 days after receiving the Letter of Acceptance and shall send a copy to the Engineer. The Performance Security shall be issued by a reputable Procuring Entity or financial institution selected by the Contractor and shall be in the form annexed to the Particular Conditions, as stipulated by the Procuring Entity in the **SCC**, or in another form approved by the Procuring Entity.

4.2.4 The Contractor shall ensure that the Performance Security is valid and enforceable until the Contractor has executed and completed the Works and remedied any defects. If the terms of the Performance Security specify its expiry date, and the Contractor has not become entitled to receive the Performance Certificate by the date 30 days prior to the expiry date, the Contractor shall extend the validity of the Performance Security until the Works have been completed and any defects have been remedied.

4.2.5 The Procuring Entity shall not make a claim under the Performance Security, except for amounts to which the Procuring Entity is entitled under the Contract.

The Procuring Entity shall indemnify and hold the Contractor harmless against and from all damages, losses and expenses (including legal fees and expenses) resulting from a claim under the Performance Security to the extent to which the Procuring Entity was not entitled to make the claim.

4.2.6 The Procuring Entity shall return the Performance Security to the Contractor within 21 days after receiving a copy of the Performance Certificate.

4.2.7 Without limitation to the provisions of the rest of this Sub-Clause, whenever the Engineer determines an addition or are duction to the Contract Price as a result of a change in cost and/or legislation, or as a result of a Variation, amounting to more than 25 percent of the portion of the Contract Price payable in a specific currency, the Contractor shall at the Engineer's request promptly increase, or may decrease, as the case may be, the value of the Performance Security in that currency by an equal percentage.

4.3 Contractor's Representative

4.3.1 The Contractor shall appoint the Contractor's Representative and shall give him all authority necessary to act on the Contractor's behalf under the Contract. Unless the Contractor's Representative is named in the Contract, the Contractor shall, prior to the Commencement Date, submit to the Engineer for consent the name and particulars of the person the Contractor proposes to appoint as Contractor's Representative. If consent is withheld or subsequently revoked in terms of Sub-Clause 6.9 [Contractor's Personnel], or if the appointed person fails to act as Contractor's Representative, the Contractor shall similarly submit the name and particulars of another suitable person for such appointment.

The Contractor shall not, without the prior consent of the Engineer, revoke the appointment of the Contractor's Representative or appoint a replacement.

4.3.2 The whole time of the Contractor's Representative shall be given to directing the Contractor's performance of the Contract. If the Contractor's Representative is to be temporarily absent from the Site during the execution of the Works, a suitable replacement person shall be appointed, subject to the Engineer's prior consent, and the Engineer shall be notified accordingly.

4.3.3 The Contractor's Representative shall, on behalf of the Contractor, receive instructions under Sub-Clause 3.3 [Instructions of the Engineer].

The Contractor's Representative may delegate any powers, functions and authority to any competent person, and may at any time revoke the delegation. Any delegation or revocation shall not take effect until the Engineer

has received prior notice signed by the Contractor's Representative, naming the person and specifying the powers, functions and authority being delegated or revoked.

4.3.4 The Contractor's Representative shall be fluent in the language for communications defined in Sub-Clause1.4 [Law and Language]. If the Contractor's Representative's delegates are not fluent in the said language, the Contractor shall make competent interpreters available during all working hours in a number deemed sufficient by the Engineer.

4.4 Subcontractors

4.4.1 The Contractor shall not subcontract the whole of the Works.

4.4.2 The Contractor shall be responsible for the acts or defaults of any Subcontractor, his agents or employees, as if they were the acts or defaults of the Contractor. Unless otherwise stated in the Particular Conditions:

a) The Contractor shall not be required to obtain consent to suppliers solely of Materials, or to a subcontract for which the Subcontractor is named in the Contract;

b) The prior consent of the Engineer shall be obtained to other proposed Sub contractors;

c) the Contractor shall give the Procuring entity not less than 14 days' notice of the intended date of the commencement of each Subcontractor's work, and of the commencement of such work on the Site; and

d) each subcontract shall include provisions which would entitle the Procuring Entity to require the subcontract to be assigned to the Procuring Entity under Sub-Clause 4.5 [Assignment of Benefit of Subcontract] (if or when applicable) or in the event of termination under Sub-Clause15.2 [Termination by Procuring Entity].

4.4.3 The Contractor shall ensure that the requirements imposed on the Contractor by Sub-Clause 1.12 [Confidential Details] apply equally to each Subcontractor.

4.4.4 Where practicable, the Contractor shall give fair and reasonable opportunity for contractors from the Country to be appointed as Subcontractors.

4.5 Assignment of Benefit of Subcontract

If a Subcontractor's obligations extend beyond the expiry date of the relevant Defects Notification Period and the Engineer, prior to this date, instructs the Contractor to assign the benefit of such obligations to the Procuring Entity, then the Contractor shall do so. Unless otherwise stated in the assignment, the Contractor shall have no liability to the Procuring Entity for the work carried out by the Subcontractor after the assignment takes effect.

4.6 Co-operation

4.6.1 The Contractor shall, as specified in the Contract or as instructed by the Engineer, allow appropriate opportunities for carrying out work to:

a) The Procuring Entity's Personnel,

b) Any other contractors employed by the Procuring Entity, and

c) The personnel of any legally constituted public authorities, who may be employed in the execution on or near the Site of any work not included in the Contract.

4.6.2 Any such instruction shall constitute a Variation if and to the extent that it causes the Contractor to suffer delays and/or to incur Unforeseeable Cost. Services for these personnel and other contractors may include the use of Contractor's Equipment, Temporary Works or access arrangements which are the responsibility of the Contractor.

If, under the Contract, the Procuring Entity is required to give to the Contractor possession of any foundation, structure, plant or means of access in accordance with Contractor’s Documents, the Contractor shall submit such documents to the Engineer in the time and manner stated in the Specification.

4.7 Setting Out

4.7.1 The Contractor shall set out the Works in relation to original points, lines and levels of reference specified in the Contractor notified by the Engineer. The Contractor shall be responsible for the correct positioning of all parts of the Works, and shall rectify any error in the positions, levels, dimensions or alignment of the Works.

The Procuring Entity shall be responsible for any errors in these specified or notified items of reference, but the Contractor shall use reasonable efforts to verify their accuracy before they are used.

4.7.2 If the Contractor suffers delay and/or incurs Cost from executing work which was necessitated by an error in these items of reference, and an experienced contractor could not reasonably have discovered such error and avoided this delay and/or Cost, the Contractor shall give notice to the Engineer and shall be entitled subject to Sub-Clause 20.1 [Contractor's Claims] to:

a) an extension of time for any such delay, if completion is or will be delayed, under Sub-Clause 8.4 [Extension of Time for Completion], and
b) payment of any such Cost-plus profit, which shall be included in the Contract Price.

4.7.3 After receiving this notice, the Engineer shall proceed in accordance with Sub-Clause 3.5 [Determinations] to agree or determine (i) whether and (if so) to what extent the error could not reasonably have been discovered, and (ii) the matters described in sub-paragraphs (a) and (b) above related to these.

4.8 Safety Procedures

The Contractor shall:

a) Comply with all applicable safety regulations,
b) Take care for the safety of all persons entitled to be on the Site,
c) Use reasonable efforts to keep the Site and Works clear of unnecessary obstructions as to avoid danger to these persons,
d) provide fencing, lighting, guarding and watching of the Works until completion and taking over under Clause10 [Procuring Entity's Taking Over], and
e) Provide any Temporary Works (including roadways, footways, guards and fences) which may be necessary, because of the execution of the Works, for the use and protection of the public and of owners and occupiers of adjacent land.

4.9 Quality Assurance

4.9.1 The Contractor shall institute a quality assurance system to demonstrate compliance with the requirements of the Contract. The system shall be in accordance with the details stated in the Contract. The Engineer shall be entitled to audit any aspect of the system.

4.9.2 Details of all procedures and compliance documents shall be submitted to the Engineer for information before each design and execution stage is commenced. When any document of a technical nature is issued to the Engineer, evidence of the prior approval by the Contractor itself shall be apparent on the document itself. Compliance with the quality assurance system shall not relieve the Contractor of any of his duties, obligations or responsibilities under the Contract.

4.10 Site Data

4.10.1 The Procuring Entity shall have made available to the Contractor for his information, prior to the Base Date, all relevant data in the Procuring Entity's possession on sub-surface and hydrological conditions at the Site, including environmental aspects. The Procuring Entity shall similarly make available to the Contract or all such data which come into the Procuring Entity's possession after the Base Date. The Contractor shall be responsible for interpreting all such data.

4.10.2 To the extent which was practicable (taking account of cost and time), the Contractor shall be deemed to have obtained all necessary information as to risks, contingencies and other circumstances which may influence or affect the Tender or Works. To the same extent, the Contractor shall be deemed to have inspected and examined the Site, its surroundings, the above data and other available information, and to have been satisfied before submitting the Tender as to all relevant matters, including (without limitation):

a) The form and nature of the Site, including sub-surface conditions,
b) The hydrological and climatic conditions,
c) The extent and nature of the work and Goods necessary for the execution and completion of the Works and the remedying of any defects,
d) The Laws, procedures and labor practices of the Country, and
e) The Contractor's requirements for access, accommodation, facilities, personnel, power, transport, water and other services.

4.11 Sufficiency of the Accepted Contract Amount

4.11.1 The Contractor shall be deemed to:

a) Have satisfied itself as to the correctness and sufficiency of the Accepted Contract Amount, and
b) Have based the Accepted Contract Amount on the data, interpretations, necessary information, inspections, examinations and satisfaction as to all relevant matters referred to in Sub-Clause 4.10 [Site Data].

4.11.2 Unless otherwise stated in the Contract, the Accepted Contract Amount covers all the Contractor's obligations under the Contract (including those under Provisional Sums, if any) and all things necessary for the proper execution and completion of the Works and the remedying of any defects.

4.12 Unforeseeable Physical Conditions

4.12.1 In this Sub-Clause, "physical conditions" means natural physical conditions and man-made and other physical obstructions and pollutants, which the Contractor encounters at the Site when executing the Works, including sub-surface and hydrological conditions but excluding climatic conditions.

4.12.2 If the Contractor encounters adverse physical conditions which he considers to have been Unforeseeable, the Contractor shall give notice to the Engineer as soon as practicable.

This notice shall describe the physical conditions, so that they can be inspected by the Engineer, and shall set out the reasons why the Contractor considers them to be Unforeseeable. The Contractor shall continue executing the Works, using such proper and reasonable measures as are appropriate for the physical conditions, and shall comply with any instructions which the Engineer may give. If an instruction constitutes a Variation, Clause 13 [Variations and Adjustments] shall apply.

4.12.3 If and to the extent that the Contractor encounters physical conditions which are Unforeseeable, gives such a notice, and suffers delay and/or incurs Cost due to these conditions, the Contractor shall be entitled subject to notice under Sub-Clause 20.1 [Contractor's Claims] to:

a) An extension of time for any such delay, if completion is or will be delayed, under Sub-Clause 8.4 [Extension of Time for Completion], and
b) Payment of any such Cost, which shall be included in the Contract Price.

4.12.4 Upon receiving such notice and inspecting and/or investigating these physical conditions, the Engineer shall proceed in accordance with Sub-Clause 3.5 [Determinations] to agree or determine (i) whether and (if so) to what extent these physical conditions were Unforeseeable, and (ii) the matters described in sub-paragraphs (a) and (b) above related to this extent.

4.12.5 However, before additional Cost is finally agreed or determined under sub-paragraph (ii), the Engineer may also review whether other physical conditions in similar parts of the Works (if any) were more favorable than could reasonably have been foreseen when the Contractor submitted the Tender. If and to the extent that these more favorable conditions were encountered, the Engineer may proceed in accordance with Sub-Clause 3.5 [Determinations] to agree or determine the reductions in Cost which were due to these conditions, which may be included (as deductions) in the Contract Price and Payment Certificates. However, the net effect of all adjustments under sub-paragraph (b) and all these reductions, for all the physical conditions encountered in similar parts of the Works, shall not result in any reduction in the Contract Price.

4.12.6 The Engineer shall take account of any evidence of the physical conditions foreseen by the Contractor when submitting the Tender, which shall be made available by the Contractor, but shall not be bound by the Contractor's interpretation of any such evidence.

4.13 Rights of Way and Facilities

Unless otherwise specified in the Contract the Procuring Entity shall provide effective access to and possession of the Site including special and/or temporary rights-of-way which are necessary for the Works. The Contractor shall obtain, at his risk and cost, any additional rights of way or facilities outside the Site which he may require for the purposes of the Works.

4.14 Avoidance of Interference

4.14.1 The Contractor shall not interfere unnecessarily or improperly with:

a) The convenience of the public, or
b) The access to and use and occupation of all roads and footpaths, irrespective of whether they are public or in the possession of the Procuring Entity or of others.

4.14.2 The Contractor shall indemnify and hold the Procuring Entity harmless against and from all damages, losses and expenses (including legal fees and expenses) resulting from any such unnecessary or improper interference.

4.15 Access Route

4.15.1 TheContractorshallbedeemedtohavebeensatisfiedastothesuitabilityandavailabilityofaccessroutestothe SiteatBaseDate.TheContractorshallusereasonableeffortstopreventanyroadorbridgefrombeingdamaged by the Contractor's traffic or by the Contractor's Personnel. These efforts shall include the proper use of appropriate vehicles and routes.

4.15.2 Except as otherwise stated in these Conditions:

a) The Contractor shall (as between the Parties) be responsible for any maintenance which may be required for his use of access routes;

b) the Contractor shall provide all necessary signs or directions along access routes, and shall obtain any permission which may be required from the relevant authorities for his use of routes, signs and directions;

c) the Procuring Entity shall not be responsible for any claims which may arise from the use or otherwise of any access route;

d) the Procuring Entity does not guarantee the suitability or availability of particular access routes; and

e) Costs due to non-suitability or non-availability, for the use required by the Contractor, of access routes shall be borne by the Contractor.

4.16 Transport of Goods

Unless otherwise stated in the Particular Conditions:

a) The Contractor shall give the Engineer not less than 21 days' notice of the date on which any Plant or a major item of other Goods will be delivered to the Site;

b) The Contractor shall be responsible for packing, loading, transporting, receiving, unloading, storing and protecting all Goods and other things required for the Works; and

c) The Contractor shall indemnify and hold the Procuring Entity harmless against and from all damages, losses and expenses (including legal fees and expenses) resulting from the transport of Goods, and shall negotiate and pay all claims arising from their transport.

4.17 Contractor's Equipment

The Contractor shall be responsible for all Contractor's Equipment. When brought onto the Site, Contractor's Equipment shall be deemed to be exclusively intended for the execution of the Works. The Contractor shall not remove from the Site any major items of Contractor's Equipment without the consent of the Engineer. However, consent shall not be required for vehicles transporting Goods or Contractor's Personnel off Site.

4.18 Protection of the Environment

4.18.1 The Contractor shall take all reasonable steps to protect the environment (both on and off the Site) and to limit damage and nuisance to people and property resulting from pollution, noise and other results of his operations.

4.18.2 The Contractor shall ensure that emissions, surfaced is charges and effluent from the Contractor's activities shall not exceed the values stated in the Specification or prescribed by applicable Laws.

4.19 Electricity, Water and Gas

4.19.1 The Contractor shall, except as stated below, be responsible for the provision of all power, water and other services he may require for his construction activities and to the extent defined in the Specifications, for the tests.

The Contractor shall be entitled to use for the purposes of the Works such supplies of electricity, water, gas and other services as may be available on the Site and of which details and prices are given in the Specification. The Contractor shall, at his risk and cost, provide any apparatus necessary for his use of these services and for measuring the quantities consumed.

4.19.2 The quantities consumed and the amounts due (at these prices) for such services shall be agreed or determined by the Engineer in accordance with Sub-Clause 2.5 [Procuring Entity's Claims] and Sub-Clause 3.5 [Determinations]. The Contractor shall pay these amounts to the Procuring Entity.

4.20 Procuring Entity's Equipment and Free-Issue Materials

4.20.1 The Procuring Entity shall make the Procuring Entity's Equipment (if any) available for the use of the Contractor in the execution of the Works in accordance with the details, arrangements and prices stated in the Specification. Unless otherwise stated in the Specification:

a) The Procuring Entity shall be responsible for the Procuring Entity's Equipment, except that

b) The Contractor shall be responsible for each item of Procuring Entity's Equipment whilst any of the Contractor's Personnel is operating it, driving it, directing it or in possession or control of it.

4.20.2 The appropriate quantities and the amounts due (at such stated prices) for the use of Procuring Entity's Equipment shall be agreed or determined by the Engineer in accordance with Sub-Clause 2.5 [Procuring Entity's Claims] and Sub-Clause 3.5 [Determinations]. The Contractor shall pay these amounts to the Procuring Entity.

The Procuring Entity shall supply, free of charge, the "free-issue materials" (if any) in accordance with the details stated in the Specification. The Procuring Entity shall, at his risk and cost, provide these materials at the time and place specified in the Contract. The Contractor shall then visually inspect them and shall promptly give notice to the Engineer of any shortage, defect or default in these materials. Unless otherwise agreed by both Parties, the Procuring Entity shall immediately rectify the notified shortage, defect or default.

4.20.3 After this visual inspection, the free-issue materials shall come under the care, custody and control of the Contractor. The Contractor's obligations of inspection, care, custody and control shall not relieve the Procuring Entity of liability for any shortage, defect or default not apparent from visual inspection.

4.21 Progress Reports

4.21.1 Unless otherwise stated in the Particular Conditions, monthly progress reports shall be prepared by the Contractor and submitted to the Engineer in six copies. The first report shall cover the period up to the end of the first calendar month following the Commencement Date. Reports shall be submitted monthly thereafter, each within 7 days after the last day of the period to which it relates.

4.21.2 Reporting shall continue until the Contractor has completed all work which is known to be outstanding at the completion date stated in the Taking-Over Certificate for the Works.

4.21.3 Each report shall include:

a) charts and detailed descriptions of progress, including each stage of design (if any), Contractor's Documents, procurement, manufacture, delivery to Site, construction, erection and testing; and including these stages for work by each nominated Subcontractor (as defined in Clause 5 [Nominated Subcontractors]),

b) photographs showing the status of manufacture and of progress on the Site;

c) for the manufacture of each main item of Plant and Materials, the name of the manufacturer, manufacture location, percentage progress, and the actual or expected dates of:

   i) commencement of manufacture,

   ii) Contractor's inspections,

   iii) tests, and

   iv) shipment and arrival at the Site;

d) the details described in Sub-Clause 6.10 [Records of Contractor's Personnel and Equipment];

e) copies of quality assurance documents, test results and certificates of Materials;

f) list of notices given under Sub-Clause 2.5 [Procuring Entity's Claims] and notices given under Sub-Clause 20.1 [Contractor's Claims];

g) safety statistics, including details of any hazardous incidents and activities relating to environmental aspects and public relations; and

h) comparisons of actual and planned progress, with details of any events or circumstances which may jeopardize the completion in accordance with the Contract, and the measures being (or to be) adopted to overcome delays.

4.21.4 The Contractor shall provide immediate notification to the Engineer of incidents in the following categories. Full details of such incidents shall be provided to the Engineer within the time frame agreed with the Engineer.

a) confirmed or likely violation of any law or international agreement;

b) any fatality or serious injury;

c) significant adverse effects or damage to private property (e.g. vehicle accident, damage from fly rock, working beyond the boundary);
d) major pollution of drinking water aquifer or damage or destruction of rare or endangered habitat (including protected areas) or species; or
e) any allegation of sexual harassment or sexual misbehavior, child abuse, defilement, or other violations involving children.

4.22 Security of the Site

Unless otherwise stated in the Particular Conditions:
a) The Contractor shall be responsible for keeping unauthorized persons off the Site, and
b) Authorized persons shall be limited to the Contractor's Personnel and the Procuring Entity's Personnel; and to any other personnel notified to the Contractor, by the Procuring Entity or the Engineer, as authorized personnel of the Procuring Entity's other contractors on the Site.

4.23 Contractor's Operations on Site

4.23.1 The Contractor shall confine his operations to the Site, and to any additional areas which may be obtained by the Contractor and agreed by the Engineer as additional working areas. The Contractor shall take all necessary precautions to keep Contractor's Equipment and Contractor's Personnel within the Site and these additional areas, and to keep them off adjacent land.

During the execution of the Works, the Contractor shall keep the Site free from all unnecessary obstruction and shall store or dispose of any Contractor's Equipment or surplus materials. The Contractor shall clear away and remove from the Site any wreckage, rubbish and Temporary Works which are no longer required.

4.23.2 Upon the issue of a Taking-Over Certificate, the Contractor shall clear away and remove, from that part of the Site and Works to which the Taking-Over Certificate refers, all Contractor's Equipment, surplus material, wreckage, rubbish and Temporary Works. The Contractor shall leave that part of the Site and the Works in a clean and safe condition. However, the Contractor may retain on Site, during the Defects Notification Period, such Goods as are required for the Contractor to fulfil obligations under the Contract.

4.24 Fossils

4.24.1 All fossils, coins, articles of value or antiquity, and structures and other remains or items of geological or archaeological interest found on the Site shall be placed under the care and authority of the Procuring Entity. The Contractor shall take reasonable precautions to prevent Contractor's Personnel or other persons from removing or damaging any of these findings.

4.24.2 The Contractor shall, upon discovery of any such finding, promptly give notice to the Engineer, who shall issue instructions for dealing with it. If the Contractor suffers delay and/or incurs Cost from complying with the instructions, the Contractor shall give a further notice to the Engineer and shall be entitled subject to Sub-Clause 20.1 [Contractor's Claims] to:
a) an extension of time for any such delay, if completion is or will be delayed, under Sub-Clause 8.4 [Extension of Time for Completion], and
b) payment of any such Cost, which shall be included in the Contract Price.

After receiving this further notice, the Engineer shall proceed in accordance with Sub-Clause 3.5 [Determinations] to agree or determine these matters.

5. NOMINATED SUB CONTRACTORS

5.1 Definition of “nominated Subcontractor

In the Contract, “nominated Subcontractor” means a Subcontractor:
a) Who is stated in the Contract as being a nominated Subcontractor, or
b) whom the Engineer, under Clause 13 [Variations and Adjustments], instructs the Contractor to employ as a Subcontractor subject to Sub-Clause 5.2 [Objection to Notification].

5.2 Objection to Nomination

The Contractor shall not be under any obligation to employ a nominated Subcontractor against whom the Contractor raises reasonable objection by notice to the Engineer as soon as practicable, with supporting

particulars. An objection shall be deemed reasonable if it arises from (among other things) any of the following matters, unless the Procuring Entity agrees in writing to indemnify the Contractor against and from the consequences of the matter:

a) there are reasons to believe that the Subcontractor does not have sufficient competence, resources or financial strength;

b) the nominated Subcontract or does not accept to indemnify the Contractor against and from any negligence or misuse of Goods by the nominated Subcontractor, his agents and employees; or

c) the nominated Subcontractor does not accept to enter into a subcontract which specifies that, for the subcontracted work (including design, if any), the nominated Subcontract or shall:

   i) undertake to the Contractor such obligations and liabilities as will enable the Contractor to discharge his obligations and liabilities under the Contract;

   ii) indemnify the Contractor against and from all obligations and liabilities arising under or in connection with the Contract and from the consequences of any failure by the Subcontractor to perform these obligations or to fulfil these liabilities, and

   iii) be paid only if and when the Contractor has received from the Procuring Entity payments for sums due under the Subcontract referred to under Sub-Clause 5.3 [Payment to nominated Subcontractors].

5.3 Payments to nominated Subcontractors

The Contractor shall pay to the nominated Subcontractor the amounts shown on the nominated Subcontractor's invoices approved by the Contractor which the Engineer certifies to be due in accordance with the subcontract. These amounts plus other charges shall be included in the Contract Price in accordance with sub-paragraph (b) of Sub-Clause 13.5 [Provisional Sums], except as stated in Sub-Clause 5.4 [Evidence of Payments].

5.4 Evidence of Payments

Before issuing a Payment Certificate which includes an amount payable to a nominated Subcontractor, the Engineer may request the Contractor to supply reasonable evidence that the nominated Subcontractor has received all amounts due in accordance with previous Payment Certificates, less applicable deductions for retention or otherwise. Unless the Contractor:

a) Submits this reasonable evidence to the Engineer, or

b) i) satisfies the Engineer in writing that the Contractor is reasonably entitled to withhold or refuse to pay these amounts, and

   ii) submits to the Engineer reasonable evidence that the nominated Subcontractor has been notified of the Contractor's entitlement, then the Procuring Entity may (at his sole discretion) pay, direct to the nominated Subcontractor, part or all of such amounts previously certified (less applicable deductions) as are due to the nominated Subcontractor and for which the Contractor has failed to submit the evidence described in sub-paragraphs (a) or (b) above. The Contractor shall then repay, to the Procuring Entity, the amount which the nominated Subcontractor was directly paid by the Procuring Entity.

6. STAFF AND LABOR

6.1 Engagement of Staff and Labor

Except as otherwise stated in the Specification, the Contractor shall make arrangements for the engagement of all staff and labor, local or otherwise, and for their payment, feeding, transport, and, when appropriate, housing. The Contractor is encouraged, to the extent practicable and reasonable, to employ staff and labor with appropriate qualifications and experience from sources within the Country.

6.2 Rates of Wages and Conditions of Labor

6.2.1 The Contractor shall pay rates of wages, and observe conditions of labor, which are not lower than those established for the trade or industry where the work is carried out. If no established rates or conditions are applicable, the Contractor shall pay rates of wages and observe conditions which are not lower than the general level of wages and conditions observed locally by Procuring Entity's whose trade or industry is similar to that of the Contractor.

6.2.2 The Contractor shall inform the Contractor's Personnel about their liability to pay personal income taxes in Kenya in respect of such of their salaries, wages, allowances and any benefits as are subject to tax under the

Laws of Kenya for the time being in force, and the Contractor shall perform such duties in regard to such deductions there of as may be imposed on him by such Laws.

6.3 Persons in the Service of Procuring Entity

The Contractor shall not recruit, or attempt to recruit, staff and labor from amongst the Procuring Entity's Personnel.

6.4 Labor Laws

6.4.1 The Contractor shall comply with all the relevant labor Laws applicable to the Contractor's Personnel, including Laws relating to their employment, health, safety, welfare, immigration and emigration, and shall allow them all their legal rights.

6.4.2 The Contractor shall require his employees to obey all applicable Laws, including those concerning safety at work.

6.5 Working Hours

No work shall be carried out on the Site on locally recognized days of rest, or outside the normal working hours stated in the **SCC**, unless:

a) Otherwise stated in the Contract,
b) The Engineer gives consent, or
c) The work is unavoidable, or necessary for the protection of life or property or for the safety of the Works, in which case the Contractor shall immediately advise the Engineer.

6.6 Facilities for Staff and Labor

6.6.1 Except as otherwise stated in the Specification, the Contractor shall provide and maintain all necessary accommodation and welfare facilities for the Contractor's Personnel. The Contractor shall also provide facilities for the Procuring Entity's Personnel as stated in the Specification.

6.6.2 The Contractor shall not permit any of the Contractor's Personnel to maintain any temporary or permanent living quarters within the structures forming part of the Permanent Works.

6.7 Health and Safety

6.7.1 The Contractor shall at all times take all reasonable precautions to maintain the health and safety of the Contractor's Personnel. In collaboration with local health authorities, the Contractor shall ensure that medical staff, first aid facilities, sick bay and ambulance service are available at all times at the Site and at any accommodation for Contractor's and Procuring Entity's Personnel, and that suitable arrangements are made for all necessary welfare and hygiene requirements and for the prevention of epidemics.

6.7.2 The Contractor shall appoint an accident prevention officer at the Site, responsible for maintaining safety and protection against accidents. This person shall be qualified for this responsibility and shall have the authority to issue instructions and take protective measures to prevent accidents. Throughout the execution of the Works, the Contractor shall provide whatever is required by this person to exercise this responsibility and authority.

6.7.3 The Contractor shall send, to the Engineer, details of any accident as soon as practicable after its occurrence. The Contractor shall maintain records and make reports concerning health, safety and welfare of persons, and damage to property, as the Engineer may reasonably require.

6.7.4 HIV-AIDS Prevention. The Contractor shall conduct an HIV-AIDS awareness programme via an approved service provider and shall undertake such other measures as are specified in this Contract to reduce the risk of the transfer of the HIV virus between and among the Contractor's Personnel and the local community, to promote early diagnosis and to assist affected individuals.

6.8 Contractor's Superintendence

6.8.1 Throughout the execution of the Works, and as long thereafter as is necessary to fulfil the Contractor's obligations, the Contractor shall provide all necessary superintendence to plan, arrange, direct, manage, inspect and test the work.

6.8.2 Superintendence shall be given by a sufficient number of persons having adequate knowledge of the language for communications (defined in Sub-Clause 1.4 [Law and Language]) and of the operations to be carried out (including the methods and techniques required, the hazards likely to be encountered and methods of preventing accidents), for the satisfactory and safe execution of the Works.

6.9 Contractor's Personnel

6.9.1 The Contractor's Personnel specified in the **SCC** shall be appropriately qualified, skilled and experienced in their respective trades or occupations. The Engineer may require the Contractor to remove (or cause to be removed) any person employed on the Site or Works, including the Contractor's Representative if applicable, who:

a) Persists in any misconduct or lack of care,
b) Carries out duties incompetently or negligently,
c) Fails to conform with any provisions of the Contract,
d) Persists in any conduct which is prejudicial to safety, health, or the protection of the environment, or
e) Based on reasonable evidence, is determined to have engaged in Fraud and Corruption during the execution of the Works.

6.9.2 If appropriate, the Contractor shall then appoint (or cause to be appointed) a suitable replacement person.

6.10 Records of Contractor's Personnel and Equipment

The Contractor shall submit, to the Engineer, details showing the number of each class of Contractor's Personnel and of each type of Contractor's Equipment on the Site. Details shall be submitted each calendar month, in a form approved by the Engineer, until the Contractor has completed all work which is known to be outstanding at the completion date stated in the Taking-Over Certificate for the Works.

6.11 Disorderly Conduct

The Contractor shall at all times take all reasonable precautions to prevent any unlawful, riotous or disorderly conduct by or amongst the Contractor's Personnel, and to preserve peace and protection of persons and property on and near the Site.

6.12 Foreign Personnel

6.12.1 The Contractor may bring in to the Country any foreign personnel who are necessary for the execution of the Works to the extent allowed by the applicable Laws. The Contractor shall ensure that these personnel are provided with the required residence visas and work permits. The Procuring Entity will, if requested by the Contractor, use his Lowest endeavors in a timely and expeditious manner to assist the Contract or in obtaining any local, state, national or government permission required for bringing in the Contractor's personnel.

6.12.2 The Contractor shall be responsible for the return of these personnel to the place where they were recruited or to their domicile. In the event of the death in the Country of any of these personnel or members of their families, the Contractor shall similarly be responsible for making the appropriate arrangements for their return or burial.

6.13 Supply of Foodstuffs

6.13.1 The Contractor shall arrange for the provision of a sufficient supply of suitable food as may be stated in the Specification at reasonable prices for the Contractor's Personnel for the purposes of or in connection with the Contract.

6.14 Supply of Water

The Contractor shall, having regard to local conditions, provide on the Site an adequate supply of drinking and other water for the use of the Contractor's Personnel.

6.15 Measures against Insect and Pest Nuisance

The Contractor shall at all times take the necessary precautions to protect the Contractor's Personnel employed on the Site from insect and pest nuisance, and to reduce the danger to their health. The Contractor shall comply with all the regulations of the local health authorities, including use of appropriate insecticide.

6.16 Alcoholic Liquor or Drugs

The Contractor shall not, otherwise than in accordance with the Laws of the Country, import, sell, give, barter or otherwise dispose of any alcoholic liquor or drugs, or permit or allow importation, sale, gift, barter or disposal thereof by Contractor's Personnel.

6.17 Arms and Ammunition

The Contractor shall not give, barter, or otherwise dispose of, to any person, any arms or ammunition of any kind, or allow Contractor's Personnel to do so.

6.18 Festivals and Religious Customs

The Contractor shall respect the Country's recognized festivals, days of rest and religious or other customs.

6.19 Funeral Arrangements

The Contractor shall be responsible, to the extent required by local regulations, for making any funeral arrangements for any of his local employees who may die while engaged upon the Works.

6.20 Prohibition of Forced or Compulsory Labor

The Contractor shall not employ forced labor, which consists of any work or service, not voluntarily performed, that is exacted from an individual under threat of force or penalty, and includes any kind of involuntary or compulsory labor, such as indentured labor, bonded labor or similar labor-contracting arrangements.

6.21 Prohibition of Harmful Child Labor

The Contractor shall not employ children in a manner that is economically exploitative, or is likely to be hazardous, or to interfere with, the child's education, or to be harmful to the child's health or physical, mental, spiritual, moral, or social development. Where the relevant labor laws of the Country have provisions for employment of minors, the Contract or shall follow those laws applicable to the Contractor. Children below the age of 18 years shall not be employed in dangerous work.

6.22 Employment Records of Workers

The Contractor shall keep complete and accurate records of the employment of labor at the Site. The records shall include the names, ages, genders, hours worked and wages paid to all workers. These records shall be summarized on a monthly basis and submitted to the Engineer. These records shall be included in the details to be submitted by the Contractor under Sub-Clause 6.10 [Records of Contractor's Personnel and Equipment].

6.23 Workers' Organizations

The Contractor shall comply with laws on workers' rights to form and to join workers' organizations without interference and to bargain collectively.

6.24 Non-Discrimination and Equal Opportunity

The Contractor shall not make employment decisions on the basis of personal characteristics unrelated to inherent job requirements. The Contractor shall base the employment relationship on the principle of equal opportunity and fair treatment and shall not discriminate with respect to aspects of the employment relationship, including recruitment and hiring, compensation (including wages and benefits), working conditions and terms of employment, access to training, promotion, termination of employment or retirement, and discipline.

7. Plant, Materials and Workmanship

7.1 Manner of Execution

The Contractor shall carry out the manufacture of Plant, the production and manufacture of Materials, and all other execution of the Works:

a) In the manner (if any) specified in the Contract,
b) In a proper workman like and careful manner, in accordance with recognized good practice, and
c) With properly equipped facilities and non-hazardous Materials, except as otherwise specified in the Contract.

7.2 Samples

The Contractor shall submit the following samples of Materials, and relevant information, to the Engineer for consent prior to using the Materials in or for the Works:

a) manufacturer's standard samples of Materials and samples specified in the Contract, all at the Contractor's cost, and

b) additional samples instructed by the Engineer as a Variation.

Each sample shall be labeled as to origin and intended use in the Works.

7.3 Inspection

7.3.1 The Procuring Entity's Personnel shall at all reasonable times:

a) Have full access to all parts of the Site and to all places from which natural Materials are being obtained, and

b) During production, manufacture and construction (at the Site and elsewhere), be entitled to examine, inspect, measure and test the materials and workmanship, and to check the progress of manufacture of Plant and production and manufacture of Materials.

7.3.2 The Contractor shall give the Procuring Entity's Personnel full opportunity to carry out these activities, including providing access, facilities, permissions and safety equipment. No such activity shall relieve the Contractor from any obligation or responsibility.

The Contractor shall give notice to the Engineer whenever any work is ready and before it is covered up, put out of sight, or packaged for storage or transport. The Engineer shall then either carry out the examination, inspection, measurement or testing without unreasonable delay, or promptly give notice to the Contractor that the Engineer does not require to do so. If the Contractor fails to give the notice, he shall, if and when required by the Engineer, uncover the work and thereafter reinstate and make good, all at the Contractor's cost.

7.4 Testing

7.4.1 This Sub-Clause shall apply to all tests specified in the Contract, other than the Tests after Completion (if any).

7.4.2 Except as otherwise specified in the Contract, the Contractor shall provide all apparatus, assistance, documents and other information, electricity, equipment, fuel, consumables, instruments, labor, materials, and suitably qualified and experienced staff, as are necessary to carry out the specified tests efficiently. The Contractor shall agree, with the Engineer, the time and place for the specified testing of any Plant, Materials and other parts of the Works.

The Engineer may, under Clause 13 [Variations and Adjustments], vary the location or details of specified tests, or instruct the Contractor to carry out additional tests. If these varied or additional tests show that the tested Plant, Materials or workmanship is not in accordance with the Contract, the cost of carrying out this Variation shall be borne by the Contractor, notwithstanding other provisions of the Contract.

7.4.3 The Engineer shall give the Contractor not less than 24 hours' notice of the Engineer's intention to attend the tests. If the Engineer does not attend at the time and place agreed, the Contractor may proceed with the tests, unless otherwise instructed by the Engineer, and the tests shall then be deemed to have been made in the Engineer’s presence.

If the Contractor suffers delay and/or incurs Cost from complying with these instructions or as a result of a delay for which the Procuring Entity is responsible, the Contractor shall give notice to the Engineer and shall be entitled subject to Sub-Clause 20.1 [Contractor's Claims] to:

a) An extension of time for any such delay, if completion is or will be delayed, under Sub-Clause 8.4 [Extension of Time for Completion], and

b) Payment of any such Cost-plus profit, which shall be included in the Contract Price.

7.4.4 After receiving this notice, the Engineer shall proceed in accordance with Sub-Clause 3.5 [Determinations] to agree or determine these matters.

The Contractor shall promptly forward to the Engineer duly certified reports of the tests. When the specified tests have been passed, the Engineer shall endorse the Contractor's test certificate, or issue a certificate to him, to that effect. If the Engineer has not attended the tests, he shall be deemed to have accepted the readings as accurate.

7.5 Rejection

7.5.1 If, as a result of an examination, inspection, measurement or testing, any Plant, Materials or workmanship is found to be defective or otherwise not in accordance with the Contract, the Engineer may reject the Plant, Materials or workmanship by giving notice to the Contractor, with reasons. The Contractor shall then promptly make good the defect and ensure that the rejected item complies with the Contract.

7.5.2 If the Engineer requires this Plant, Materials or workmanship to be retested, the tests shall be repeated under the same terms and conditions. If the rejection and retesting cause the Procuring Entity to incur additional costs, the Contractor shall subject to Sub-Clause 2.5 [Procuring Entity's Claims] pay these costs to the Procuring Entity.

7.6 Remedial Work

7.6.1 Notwithstanding any previous test or certification, the Engineer may instruct the Contractor to:

a) remove from the Site and replace any Plant or Materials which is not in accordance with the Contract,

b) remove and re-execute any other work which is not in accordance with the Contract, and

c) execute any work which is urgently required for the safety of the Works, whether because of an accident, unforeseeable event or otherwise.

7.6.2 The Contractor shall comply with the instruction within a reasonable time, which shall be the time (if any) specified in the instruction, or immediately if urgency is specified under sub-paragraph (c).

7.6.3 If the Contractor fails to comply with the instruction, the Procuring Entity shall be entitled to employ and pay other persons to carry out the work. Except to the extent that the Contractor would have been entitled to payment for the work, the Contractor shall subject to Sub-Clause 2.5 [Procuring Entity's Claims] pay to the Procuring Entity all costs arising from this failure.

7.7 Ownership of Plant and Materials

Except as otherwise provided in the Contract, each item of Plant and Materials shall, to the extent consistent with the Laws of the Country, become the property of the Procuring Entity at whichever is the earlier of the following times, free from liens and other encumbrances:

a) When it is incorporated in the Works;

b) When the Contractor is paid the corresponding value of the Plant and Materials under Sub-Clause 8.10 [Payment for Plant and Materials in Event of Suspension].

7.8 Royalties

Unless otherwise stated in the Specification, the Contractor shall pay all royalties, rents and other payments for:

a) Natural Materials obtained from outside the Site, and

b) The disposal of material from demolitions and excavations and of other surplus material (whether natural or man-made), except to the extent that disposal areas within the Site are specified in the Contract.

8. COMMENCEMENT, DELAYS AND SUSPENSION

8.1 Commencement of Works

8.1.1 Except as otherwise specified in the Special Conditions of Contract, the Commencement Date shall be the date at which the following precedent conditions have all been fulfilled and the Engineer's notification recording the agreement of both Parties on such fulfilment and instructing to commence the Work is received by the Contractor:

a) Contract by relevant authorities of the Country;

b) delivery to the Contractor of reasonable evidence of the Procuring Entity's financial arrangements (under Sub-Clause 2.4 [Procuring Entity's Financial Arrangements]);

c) signature of the Contract Agreement by both Parties, and if required, approval of the except if otherwise specified in the **SCC**, effective access to and possession of the Site given to the Contractor together with such permission(s) under (a) of Sub-Clause 1.13 [Compliance with Laws] as required for the commencement of the Works

d) receipt by the Contract or of the Advance Payment under Sub-Clause14.2 [Advance Payment] provided that the corresponding Procuring Entity guarantee has been delivered by the Contractor.

8.1.2 If the said Engineer's instruction is not received by the Contractor within 180 days from his receipt of the Letter of Acceptance, the Contractor shall be entitled to terminate the Contract under Sub-Clause 16.2 [Termination by Contractor].

8.1.3 The Contractor shall commence the execution of the Works as soon as is reasonably practicable after the

Commencement Date and shall then proceed with the Works with due expedition and without delay.

8.2 Time for Completion

The Contractor shall complete the whole of the Works, and each Section (if any), within the Time for Completion for the Works or Section (as the case may be), including:

a) achieving the passing of the Tests on Completion, and

b) completing all work which is stated in the Contract as being required for the Works or Section to be considered to be completed for the purposes of taking-over under Sub-Clause 10.1 [Taking Over of the Works and Sections].

8.3 Programme

8.3.1 The Contractor shall submit a detailed time programme to the Engineer within 14 days after receiving the notice under Sub-Clause 8.1 [Commencement of Works]. The Contractor shall also submit a revised programme whenever the previous programme is inconsistent with actual progress or with the Contractor's obligations. Each programme shall include:

a) the order in which the Contractor intends to carry out the Works, including the anticipated timing of each stage of design (if any), Contractor's Documents, procurement, manufacture of Plant, delivery to Site, construction, erection and testing,

b) each of these stages for work by each nominated Subcontractor (as defined in Clause 5 [Nominated Subcontractors]),

c) the sequence and timing of inspections and tests specified in the Contract, and

d) a supporting report which includes:

   i) a general description of the methods which the Contract or intends to adopt, and of the major stages, in the execution of the Works, and

   ii) details showing the Contractor's reasonable estimate of the number of each class of Contractor's Personnel and of each type of Contractor's Equipment, required on the Site for each major stage.

8.3.2 Unless the Engineer, within 14 days after receiving a programme, gives notice to the Contractor stating the extent to which it does not comply with the Contract, the Contractor shall proceed in accordance with the programme, subject to his other obligations under the Contract. The Procuring Entity's Personnel shall be entitled to rely upon the programme when planning their activities.

8.3.3 The Contractor shall promptly give notice to the Engineer of specific probable future events or circumstances which may adversely affect the work, increase the Contract Price or delay the execution of the Works. The Engineer may require the Contractor to submit an estimate of the anticipated effect of the future event or circumstances, and/or a proposal under Sub-Clause 13.3 [Variation Procedure].

8.3.4 If, at any time, the Engineer gives notice to the Contractor that a programme fails (to the extent stated) to comply with the Contract or to be consistent with actual progress and the Contractor's stated intentions, the Contractor shall submit a revised programme to the Engineer in accordance with this Sub-Clause.

8.4 Extension of Time for Completion

8.4.1 The Contractor shall be entitled subject to Sub-Clause 20.1 [Contractor's Claims] to an extension of the Time for Completion if and to the extent that completion for the purposes of Sub-Clause10.1 [Taking Over of the Works and Sections] is or will be delayed by any of the following causes:

a) a Variation (unless an adjustment to the Time for Completion has been agreed under Sub-Clause 13.3 [Variation Procedure]) or other substantial change in the quantity of an item of work included in the Contract,

b) a cause of delay giving an entitlement to extension of time under a Sub-Clause of these Conditions,

c) exceptionally adverse climatic conditions,

d) Unforeseeable shortages in the availability of personnel or Goods caused by epidemic or governmental actions, or

e) Any delay, impediment or prevention caused by or attributable to the Procuring Entity, the Procuring Entity's Personnel, or the Procuring Entity's other contractors.

8.4.2 If the Contractor considers itself to be entitled to an extension of the Time for Completion, the Contractor shall give notice to the Engineer in accordance with Sub-Clause 20.1 [Contractor's Claims]. When determining each extension of time under Sub-Clause 20.1, the Engineer shall review previous determinations and may

increase, but shall not decrease, the total extension of time.

8.5 Delays Caused by Authorities

If the following conditions apply, namely:

a) The Contractor has diligently followed the procedures laid down by the relevant legally constituted public authorities in the Country,
b) These authorities delay or disrupt the Contractor's work, and
c) The delay or disruption was Unforeseeable, then this delay or disruption will be considered as a cause of delay under sub-paragraph (b) of Sub-Clause 8.4 [Extension of Time for Completion].

8.6 Rate of Progress

8.6.1 If, at any time:

a) Actual progress is too slow to complete within the Time for Completion, and/or
b) Progress has fallen (or will fall) behind the current programme under Sub-Clause 8.3 [Programme], other than as a result of a cause listed in Sub-Clause 8.4 [Extension of Time for Completion], then the Engineer may instruct the Contractor to submit, under Sub-Clause 8.3 [Programme], a revised programme and supporting report describing the revised methods which the Contractor proposes to adopt in order to expedite progress and complete within the Time for Completion.

   Unless the Engineer notifies otherwise, the Contractor shall adopt these revised methods, which may require increases in the working hours and/or in the numbers of Contractor's Personnel and/or Goods, at the risk and cost of the Contractor. If these revised methods cause the Procuring Entity to incur additional costs, the Contractor shall subject to notice under Sub-Clause 2.5 [Procuring Entity's Claims] pay these costs to the Procuring Entity, in addition to delay damages (if any) under Sub-Clause 8.7 below.

8.6.2 Additional costs of revised methods including acceleration measures, instructed by the Engineer to reduce delays resulting from causes listed under Sub-Clause 8.4 [Extension of Time for Completion] shall be paid by the Procuring Entity, without generating, however, any other additional payment benefit to the Contractor.

8.7 Delay Damages

8.7.1 If the Contractor fails to comply with Sub-Clause 8.2 [Time for Completion], the Contractor shall subject to notice under Sub-Clause 2.5 [Procuring Entity's Claims] pay delay damages to the Procuring Entity for this default. These delay damages shall be the sum stated in the **SCC**, which shall be paid for everyday which shall elapse between the relevant Time for Completion and the date stated in the Taking-Over Certificate. However, the total amount due under this Sub-Clause shall not exceed the maximum amount of delay damages (if any) stated in the **SCC**.

8.7.2 These delay damages shall be the only damages due from the Contractor for such default, other than in the event of termination under Sub-Clause 15.2 [Termination by Procuring Entity] prior to completion of the Works. These damages shall not relieve the Contractor from his obligation to complete the Works, or from any other duties, obligations or responsibilities which he may have under the Contract.

8.8 Suspension of Work

8.8.1 The Engineer may at any time instruct the Contractor to suspend progress of part or all of the Works. During such suspension, the Contractor shall protect, store and secure such part or the Works against any deterioration, loss or damage.

8.8.2 The Engineer may also notify the cause for the suspension. If and to the extent that the cause is notified and is the responsibility of the Contractor, the following Sub-Clauses 8.9, 8.10 and 8.11 shall not apply.

8.9 Consequences of Suspension

8.9.1 If the Contractor suffers delay and/or incurs Cost from complying with the Engineer's instructions under Sub-Clause 8.8 [Suspension of Work] and/or from resuming the work, the Contractor shall give notice to the Engineer and shall been titled subject to Sub-Clause 20.1 [Contractor's Claims] to:

a) An extension of time for any such delay, if completion is or will be delayed, under Sub-Clause 8.4 [Extension of Time for Completion], and
b) Payment of any such Cost, which shall be included in the Contract Price.

After receiving this notice, the Engineer shall proceed in accordance with Sub-Clause 3.5 [Determinations] to agree or determine these matters.

8.9.2 The Contractor shall not be entitled to an extension of time for, or to payment of the Cost incurred in, making good the consequences of the Contractor's faulty design, workmanship or materials, or of the Contractor's failure to protect, store or secure in accordance with Sub-Clause 8.8 [Suspension of Work].

8.10 Payment for Plant and Materials in Event of Suspension

The Contractor shall be entitled to payment of the value (as at the date of suspension) of Plant and/or Materials which have not been delivered to Site, if:

a) the work on Plant or delivery of Plant and/or Materials has been suspended for more than 30 days, and
b) the Contractor has marked the Plant and/or Materials as the Procuring Entity's property in accordance with the Engineer's instructions.

8.11 Prolonged Suspension

If the suspension under Sub-Clause 8.8 [Suspension of Work] has continued for more than 84 days, the Contractor may request the Engineer's permission to proceed. If the Engineer does not give permission within 30 days after being requested to do so, the Contractor may, by giving notice to the Engineer, treat the suspension as an omission under Clause 13 [Variations and Adjustments] of the affected part of the Works. If the suspension affects the whole of the Works, the Contractor may give notice of termination under Sub-Clause 16.2 [Termination by Contractor].

8.12 Resumption of Work

After the permission or instruction to proceed is given, the Contractor and the Engineer shall jointly examine the Works and the Plant and Materials affected by the suspension. The Contractor shall make good any deterioration or defect in or loss of the Works or Plant or Materials, which has occurred during the suspension after receiving from the Engineer an instruction to this effect under Clause13 [Variations and Adjustments].

9. TESTS ON COMPLETION

9.1 Contractor's Obligations

9.1.1 The Contractor shall carry out the Tests on Completion in accordance with this Clause and Sub-Clause 7.4 [Testing], after providing the documents in accordance with sub-paragraph (d) of Sub-Clause 4.1 [Contractor's General Obligations].

9.1.2 The Contractor shall give to the Engineer not less than 21 days' notice of the date after which the Contract or will be ready to carry out each of the Tests on Completion. Unless otherwise agreed, Tests on Completion shall be carried out within 14 days after this date, on such day or days as the Engineer shall instruct.

9.1.3 In considering the results of the Tests on Completion, the Engineer shall make allowances for the effect of any use of the Works by the Procuring Entity on the performance or other characteristics of the Works. As soon as the Works, or a Section, have passed any Tests on Completion, the Contractor shall submit a certified report of the results of these Tests to the Engineer.

9.2 Delayed Tests

9.2.1 If the Tests on Completion are being unduly delayed by the Procuring Entity, Sub-Clause 7.4 [Testing] (fifth paragraph) and/or Sub-Clause 10.3 [Interference with Tests on Completion] shall be applicable.

If the Tests on Completion are being unduly delayed by the Contractor, the Engineer may by notice require the Contractor to carry out the Tests within 21 days after receiving the notice. The Contractor shall carry out the Tests on such day or days within that period as the Contract or may fix and of which he shall give notice to the Engineer.

If the Contractor fails to carry out the Tests on Completion within the period of 21 days, the Procuring Entity's Personnel may proceed with the Tests at the risk and cost of the Contractor. The Tests on Completion shall then be deemed to have been carried out in the presence of the Contract or and the results of the Tests shall be accepted as accurate.

9.3 Retesting

If the Works, or a Section, fail to pass the Tests on Completion, Sub-Clause 7.5 [Rejection] shall apply, and the Engineer or the Contractor may require the failed Tests, and Tests on Completion on any related work, to be repeated under the same terms and conditions.

9.4 Failure to Pass Tests on Completion

9.4.1 If the Works, or a Section, fail to pass the Tests on Completion repeated under Sub-Clause 9.3 [Retesting], the Engineer shall be entitled to:

a) Order further repetition of Tests on Completion under Sub-Clause 9.3;

b) If the failure deprives the Procuring Entity of substantially the whole benefit of the Works or Section, reject the Works or Section (as the case may be), in which event the Procuring Entity shall have the same remedies as are provided in sub-paragraph (c) of Sub-Clause 11.4 [Failure to Remedy Defects]; or

c) Issue a Taking-Over Certificate, if the Procuring Entity so requests.

9.4.2 In the event of sub-paragraph (c), the Contractor shall proceed in accordance with all other obligations under the Contract, and the Contract Price shall be reduced by such amount as shall be appropriate to cover the reduced value to the Procuring Entity as a result of this failure. Unless the relevant reduction for this failure is stated (or its method of calculation is defined) in the Contract, the Procuring Entity may require the reduction to be (i) agreed by both Parties (in full satisfaction of this failure only) and paid before this Taking-Over Certificate is issued, or
(ii) determined and paid under Sub-Clause 2.5 [Procuring Entity's Claims] and Sub-Clause 3.5 [Determinations].

10. PROCURING ENTITY'S TAKING OVER

10.1 Taking Over of the Works and Sections

10.1.1 Except as stated in Sub-Clause 9.4 [Failure to Pass Tests on Completion], the Works shall be taken over by the Procuring Entity when (i) the Works have been completed in accordance with the Contract, including the matters described in Sub-Clause 8.2 [Time for Completion] and except as allowed in sub-paragraph (a) below, and (ii) a Taking-Over Certificate for the Works has been issued, or is deemed to have been issued in accordance with this Sub-Clause.

10.1.2 The Contract or may apply by notice to the Engineer for a Taking-Over Certificate not earlier than 14 days before the Works will, in the Contractor's opinion, be complete and ready for taking over. If the Works are divided into Sections, the Contract or may similarly apply for a Taking-Over Certificate for each Section.

10.1.3 The Engineer shall, within 30 days after receiving the Contractor's application:

a) issue the Taking-Over Certificate to the Contractor, stating the date on which the Works or Section were completed in accordance with the Contract, except for any minor outstanding work and defects which will not substantially affect the use of the Works or Section for their intended purpose (either until or whilst this work is completed and these defects are remedied); or

b) reject the application, giving reasons and specifying the work required to be done by the Contractor to enable the Taking-Over Certificate to be issued. The Contractor shall then complete this work before issuing a further notice under this Sub-Clause.

10.1.4 If the Engineer fails either to issue the Taking-Over Certificate or to reject the Contractor's application within the period of 30 days, and if the Works or Section (as the case may be) are substantially in accordance with the Contract, the Taking-Over Certificate shall be deemed to have been issued on the last day of that period.

10.2 Taking Over of Parts of the Works

10.2.1 The Engineer may, at the sole discretion of the Procuring Entity, issue a Taking-Over Certificate for any part of the Permanent Works.

The Procuring Entity shall not use any part of the Works (other than as a temporary measure which is either specified in the Contract or agreed by both Parties) unless and until the Engineer has issued a Taking-Over Certificate for this part. However, if the Procuring Entity does use any part of the Works before the Taking-Over Certificate is issued:

a) The part which is used shall be deemed to have been taken over as from the date on which it is used,

b) The Contractor shall cease to be liable for the care of such part as from this date, when responsibility shall pass to the Procuring Entity, and

c) If requested by the Contractor, the Engineer shall issue a Taking-Over Certificate for this part.

10.2.2 After the Engineer has issued a Taking-Over Certificate for a part of the Works, the Contractor shall be given the earliest opportunity to take such steps as may be necessary to carry out any outstanding Tests on Completion. The Contractor shall carry out these Tests on Completion as soon as practicable before the expiry date of the relevant Defects Notification Period.

10.2.3 If the Contractor incurs Cost as a result of the Procuring Entity taking over and/or using a part of the Works, other than such use as is specified in the Contractor agreed by the Contractor, the Contractor shall (i) give notice to the Engineer and (ii) be entitled subject to Sub-Clause 20.1 [Contractor's Claims] to payment of any such Cost-plus profit, which shall be included in the Contract Price. After receiving this notice, the Engineer shall proceed in accordance with Sub-Clause 3.5 [Determinations] to agree or determine this Cost and profit.

10.2.4 If a Taking-Over Certificate has been issued for a part of the Works (other than a Section), the delay damages thereafter for completion of the remainder of the Works shall be reduced. Similarly, the delay damages for the remainder of the Section (if any) in which this part is included shall also be reduced. For any period of delay after the date stated in this Taking-Over Certificate, the proportional reduction in these delay damages shall be calculated as the proportion which the value of the part so certified bears to the value of the Works or Section (as the case may be) as a whole. The Engineer shall proceed in accordance with Sub-Clause 3.5 [Determinations] to agree or determine these proportions. The provisions of this paragraph shall only apply to the daily rate of delay damages under Sub-Clause 8.7 [Delay Damages] and shall not affect the maximum amount of these damages.

10.3 Interference with Tests on Completion

10.3.1 If the Contractor is prevented, for more than 14 days, from carrying out the Tests on Completion by a cause for which the Procuring Entity is responsible, the Procuring Entity shall be deemed to have taken over the Works or Section (as the case may be) on the date when the Tests on Completion would otherwise have been completed.

The Engineer shall then issue a Taking-Over Certificate accordingly, and the Contractor shall carry out the Tests on Completion as soon as practicable, before the expiry date of the Defects Notification Period. The Engineer shall require the Tests on Completion to be carried out by giving 14 days' notice and in accordance with the relevant provisions of the Contract.

10.3.2 If the Contractor suffers delay and/or incurs Cost as a result of this delay in carrying out the Tests on Completion, the Contractor shall give notice to the Engineer and shall be entitled subject to Sub-Clause 20.1 [Contractor's Claims] to:

a) An extension of time for any such delay, if completion is or will be delayed, under Sub-Clause 8.4 [Extension of Time for Completion], and

b) Payment of any such Cost-plus profit, which shall be included in the Contract Price.

10.3.3 After receiving this notice, the Engineer shall proceed in accordance with Sub-Clause 3.5 [Determinations] to agree or determine these matters.

10.4 Surfaces Requiring Reinstatement

Except as otherwise stated in a Taking-Over Certificate, a certificate for a Section or part of the Works shall not be deemed to certify completion of any ground or other surfaces requiring reinstatement.

11. Defects Liability

11.1 Completion of Outstanding Work and Remedying Defects

11.1.1 In order that the Works and Contractor's Documents, and each Section, shall be in the condition required by the Contract (fair wear and tear excepted) by the expiry date of the relevant Defects Notification Period or as soon as practicable thereafter, the Contractor shall:

a) complete any work which is outstanding on the date stated in a Taking-Over Certificate, within such reasonable time as is instructed by the Engineer, and

b) execute all work required to remedy defects or damage, as may be notified by (or on behalf of) the Procuring Entity on or before the expiry date of the Defects Notification Period for the Works or Section (as the case may be).

11.1.2 If a defect appears or damage occurs, the Contractor shall be notified accordingly, by (or on behalf of) the Procuring Entity.

11.2 Cost of Remedying Defects

11.2.1 All work referred to in sub-paragraph (b) of Sub-Clause 11.1 [Completion of Outstanding Work and Remedying Defects] shall be executed at the risk and cost of the Contractor, if and to the extent that the work is attributable to:

a) Any design for which the Contractor is responsible,
b) Plant, Materials or workmanship not being in accordance with the Contract, or
c) Failure by the Contractor to comply with any other obligation.

11.2.2 If and to the extent that such work is attributable to any other cause, the Contractor shall be notified promptly by (or on behalf of) the Procuring Entity, and Sub-Clause 13.3 [Variation Procedure] shall apply.

11.3 Extension of Defects Notification Period

11.3.1 The Procuring Entity shall be entitled subject to Sub-Clause 2.5 [Procuring Entity's Claims] to an extension of the Defects Notification Period for the Works or a Section if and to the extent that the Works, Section or a major item of Plant (as the case may be, and after taking over) cannot be used for the purposes for which they are intended by reason of a defect or by reason of damage attributable to the Contractor. However, a Defects Notification Period shall not be extended by more than two years.

11.3.2 If delivery and/or erection of Plant and/or Materials was suspended under Sub-Clause 8.8 [Suspension of Work] or Sub-Clause 16.1 [Contractor's Entitlement to Suspend Work], the Contractor's obligations under this Clause shall not apply to any defects or damage occurring more than two years after the Defects Notification Period for the Plant and/or Materials would otherwise have expired.

11.4 Failure to Remedy Defects

11.4.1 If the Contractor fails to remedy any defector damage within a reasonable time, a date may be fixed by (or on behalf of) the Procuring Entity, on or by which the defect or damage is to be remedied. The Contractor shall be given reasonable notice of this date.

11.4.2 If the Contractor fails to remedy the defect or damage by this notified date and this remedial work was to be executed at the cost of the Contractor under Sub-Clause 11.2 [Cost of Remedying Defects], the Procuring Entity may (at his option):

a) Carry out the work itself or by others, in a reasonable manner and at the Contractor's cost, but the Contractor shall have no responsibility for this work; and the Contractor shall subject to Sub-Clause 2.5 [Procuring Entity's Claims] pay to the Procuring Entity the costs reasonably incurred by the Procuring Entity in remedying the defect or damage;
b) Require the Engineer to agree or determine a reasonable reduction in the Contract Price in accordance with Sub-Clause3.5 [Determinations]; or
c) If the defect or damage deprives the Procuring Entity of substantially the whole benefit of the Works or any major part of the Works, terminate the Contract as a whole, or in respect of such major part which cannot be put to the intended use.

11.4.3 Without prejudice to any other rights, under the Contractor otherwise, the Procuring Entity shall then be entitled to recover all sums paid for the Works or for such part (as the case may be), plus financing costs and the cost of dismantling the same, clearing the Site and returning Plant and Materials to the Contractor.

11.5 Removal of Defective Work

If the defect or damage cannot be remedied expeditiously on the Site and the Procuring Entity gives consent, the Contractor may remove from the Site for the purposes of repair such items of Plant as are defective or damaged. This consent may require the Contractor to increase the amount of the Performance Security by the full replacement cost of these items, or to provide other appropriate security.

11.6 Further Tests

11.6.1 If the work of remedying of any defect or damage may affect the performance of the Works, the Engineer may require the repetition of any of the tests described in the Contract. The requirement shall be made by notice within 30 days after the defect or damage is remedied.

11.6.2 These tests shall be carried out in accordance with the terms applicable to the previous tests, except that hey shall be carried out at the risk and cost of the Party liable, under Sub-Clause 11.2 [Cost of Remedying

Defects], for the cost of the remedial work.

11.7 Right of Access

Until the Performance Certificate has been issued, the Contractor shall have such right of access to the Works as is reasonably required in order to comply with this Clause, except as may be inconsistent with the Procuring Entity's reasonable security restrictions.

11.8 Contractor to Search

The Contractor shall, if required by the Engineer, search for the cause of any defect, under the direction of the Engineer. Unless the defect is to be remedied at the cost of the Contractor under Sub-Clause 11.2 [Cost of Remedying Defects], the Cost of the search plus profit shall be agreed or determined by the Engineer in accordance with Sub-Clause 3.5 [Determinations] and shall be included in the Contract Price.

11.9 Completion Certificate

11.9.1 Performance of the Contractor's obligations shall not be considered to have been completed until the Engineer has issued the Performance Certificate to the Contractor, stating the date on which the Contractor completed his obligations under the Contract.

11.9.2 The Engineer shall issue the Performance Certificate within 30 days after the latest of the expiry dates of the Defects Notification Periods, or as soon thereafter as the Contractor has supplied all the Contractor's Documents and completed and tested all the Works, including remedying any defects. A copy of the Performance Certificate shall be issued to the Procuring Entity.

11.9.3 Only the Performance Certificate shall be deemed to constitute acceptance of the Works.

11.10 Unfulfilled Obligations

After the Performance Certificate has been issued, each Party shall remain liable for the fulfilment of any obligation which remains unperformed at that time. For the purposes of determining the nature and extent of unperformed obligations, the Contract shall be deemed to remain in force.

11.11 Clearance of Site

11.11.1 Upon receiving the Performance Certificate, the Contractor shall remove any remaining Contractor's Equipment, surplus material, wreckage, rubbish and Temporary Works from the Site.

11.11.2 If all these items have not been removed within 30 days after receipt by the Contractor of the Performance Certificate, the Procuring Entity may sell or otherwise dispose of any remaining items. The Procuring Entity shall be entitled to be paid the costs incurred in connection with, or attributable to, such sale or disposal and restoring the Site.

Any balance of the moneys from the sale shall be paid to the Contractor. If these moneys are less than the Procuring Entity's costs, the Contractor shall pay the outstanding balance to the Procuring Entity.

12. MEASUREMENT AND EVALUATION

12.1 Works to be Measured

12.1.1 The Works shall be measured, and valued for payment, in accordance with this Clause. The Contractor shall show in each application under Sub-Clauses 14.3 [Application for Interim Payment Certificates], 14.10 [Statement on Completion] and 14.11 [Application for Final Payment Certificate] the quantities and other particulars detailing the amounts which he considers to be entitled under the Contract.

12.1.2 Whenever the Engineer requires any part of the Works to be measured, reasonable notice shall be given to the Contractor's Representative, who shall:

a) promptly either attend or send another qualified representative to assist the Engineer in making the measurement, and

(b) supply any particulars requested by the Engineer.

If the Contractor fails to attend or send a representative, the measurement made by (or on behalf of) the Engineer shall be accepted as accurate.

12.1.3 Except as otherwise stated in the Contract, wherever any Permanent Works are to be measured from records, these shall be prepared by the Engineer. The Contractor shall, as and when requested, attend to examine and agree the records with the Engineer, and shall sign the same when agreed. If the Contractor does not attend, the records shall be accepted as accurate.

12.1.4 If the Contractor examines and disagrees the records, and/or does not sign them as agreed, then the Contractor shall give notice to the Engineer of the respects in which the records are asserted to be inaccurate. After receiving this notice, the Engineer shall review the records and either confirm or vary them and certify the payment of the undisputed part. If the Contractor does not so give notice to the Engineer within 14 days after being requested to examine the records, they shall be accepted as accurate.

12.2 Method of Measurement

Except as otherwise stated in the Contract and notwithstanding local practice:

a) Measurement shall be made of the net actual quantity of each item of the Permanent Works, and
b) The method of measurement shall be in accordance with the Bills of Quantities or other applicable Schedules.

12.3 Evaluation

12.3.1 Except as otherwise stated in the Contract, the Engineer shall proceed in accordance with Sub-Clause 3.5 [Determinations] to agree or determine the Contract Price by evaluating each item of work, applying the measurement agreed or determined in accordance with the above Sub-Clauses 12.1 and 12.2 and the appropriate rate or price for the item.

For each item of work, the appropriate rate or price for the item shall be the rate or price specified for such item in the Contractor, if there is no such item, specified for similar work.

12.3.2 Any item of work included in the Bills of Quantities for which no rate or price was specified shall be considered as included in other rates and prices in the Bills of Quantities and will not be paid for separately.

However, a new rate or price shall be appropriate for an item of work if:

a) I) the measured quantity of the item is changed by more than 25% from the quantity of this item in the Bills of Quantities or another Schedule,
   ii) This change in quantity multiplied by such specified rate for this item exceeds 0.25% of the Accepted Contract Amount,
   iii) This change in quantity directly changes the Cost per unit quantity of this item by more than 1%, and
   iv) This item is not specified in the Contract as a “fixed rate item”; or
b) i) the work is instructed under Clause 13 [Variations and Adjustments],
   ii) no rate or price is specified in the Contract for this item, and
   iii) no specified rate or price is appropriate because the item of work is not of similar character, or is not executed under similar conditions, as any item in the Contract.

12.3.3 Each new rate or price shall be derived from any relevant rates or prices in the Contract, with reasonable adjustments to take account of the matters described in sub-paragraph (a) and/or (b), as applicable. If no rates or prices are relevant for the derivation of a new rate or price, it shall be derived from the reasonable Cost of executing the work, together with profit, taking account of any other relevant matters.

12.3.4 Until such time as an appropriate rate or price is agreed or determined, the Engineer shall determine a provisional rate or price for the purposes of Interim Payment Certificates as soon as the concerned work commences.

12.3.5 Where the contract price is different from the corrected tender price, in order to ensure the contractor is not paid less or more relative to the contract price (*which would be the tender price*), payment valuation certificates and variation orders on omissions and additions valued based on rates in the Bill of Quantities or schedule of rates in the Tender, will be adjusted by a plus or minus percentage. The percentage already worked out during tender evaluation is worked out as follows: *(corrected tender price–tender price)/tender price X 100*.

12.4 Omissions

Whenever the omission of any work form's part (or all) of a Variation, the value of which has not been agreed, if:

a) the Contractor will incur (or has incurred) cost which, if the work had not been omitted, would have been deemed to be covered by a sum forming part of the Accepted Contract Amount;
b) the omission of the work will result (or has resulted) in this sum not forming part of the Contract Price; and
c) this cost is not deemed to be included in the evaluation of any substituted work; then the Contractor shall give notice to the Engineer accordingly, with supporting particulars. Upon receiving this notice, the Engineer shall proceed in accordance with Sub-Clause 3.5 [Determinations] to agree or determine this cost, which shall be included in the Contract Price.

13. VARIATIONS AND ADJUSTMENTS

13.1 Right to Vary

13.1.1 Variations may be initiated by the Engineer at any time prior to issuing the Taking-Over Certificate for the Works, either by an instruction or by a request for the Contractor to submit a proposal.

13.1.2 The Contractor shall execute and be bound by each Variation, unless the Contractor promptly gives notice to the Engineer stating (with supporting particulars) that (i) the Contractor cannot readily obtain the Goods required for the Variation, or (ii) such Variation triggers a substantial change in the sequence or progress of the Works. Upon receiving this notice, the Engineer shall cancel, confirm or vary the instruction.
Each Variation may include:

a) Changes to the quantities of any item of work included in the Contract (however, such changes do not necessarily constitute a Variation),
b) Changes to the quality and other characteristics of any item of work,
c) Changes to the levels, positions and/or dimensions of any part of the Works,
d) Omission of any work unless it is to be carried out by others,
e) Any additional work, Plant, Materials or services necessary for the Permanent Works, including any associated Tests on Completion, boreholes and other testing and exploratory work, or
f) Changes to the sequence or timing of the execution of the Works.

13.1.3 The Contractor shall not make any alteration and/or modification of the Permanent Works, unless and until the Engineer instructs or approves a Variation.

13.2 Value Engineering

13.2.1 The Contract or may, at any time, submit to the Engineer a written proposal which (in the Contractor's opinion) will, if adopted, (i) accelerate completion, (ii) reduce the cost to the Procuring Entity of executing, maintaining or operating the Works, (iii) improve the efficiency or value to the Procuring Entity of the completed Works, or (iv) otherwise be of benefit to the Procuring Entity.

13.2.2 The proposal shall be prepared at the cost of the Contract or and shall include the items listed in Sub- Clause 13.3 [Variation Procedure].

If a proposal, which is approved by the Engineer, includes a change in the design of part of the Permanent Works, then unless otherwise agreed by both Parties:

a) The Contractor shall design this part,

b) Sub-paragraphs (a) to (d) of Sub-Clause 4.1 [Contractor's General Obligations] shall apply, and

c) If this change results in a reduction in the contract value of this part, the Engineer shall proceed in accordance with Sub-Clause 3.5 [Determinations] to agree or determine a fee, which shall be included in the Contract Price. This fee shall be half (50%) of the difference between the following amounts:

   i) such reduction in contract value, resulting from the change, excluding adjustments under Sub-Clause 13.7 [Adjustments for Changes in Legislation] and Sub-Clause 13.8 [Adjustments for Changes in Cost], and

   ii) the reduction (if any) in the value to the Procuring Entity of the varied works, taking account of any reductions in quality, anticipated life or operational efficiencies.

13.2.3 However, if amount (i) is less than amount (ii), there shall not be a fee.

13.3 Variation Procedure

13.3.1 If the Engineer requests a proposal, prior to instructing a Variation, the Contractor shall respond in writing as soon as practicable, either by giving reasons why he cannot comply (if this is the case) or by submitting:

a) a description of the proposed work to be performed and a programme for its execution,

b) the Contractor's proposal for any necessary modifications to the programme according to Sub-Clause 8.3 [Programme] and to the Time for Completion, and

c) the Contractor's proposal for evaluation of the Variation.

13.3.2 The Engineer shall, as soon as practicable after receiving such proposal (under Sub-Clause 13.2 [Value Engineering] or otherwise), respond with approval, disapproval or comments. The Contractor shall not delay any work whilst awaiting a response.

13.3.3 Each instruction to execute a Variation, with any requirements for the recording of Costs, shall be issued by the Engineer to the Contractor, who shall acknowledge receipt.

Each Variation shall be evaluated in accordance with Clause 12 [Measurement and Evaluation], unless the Engineer instructs or approves otherwise in accordance with this Clause.

13.4 Payment in Applicable Currencies

If the Contract provides for payment of the Contract Price in more than one currency, then whenever an adjustment is agreed, approved or determined as stated above, the amount payable in each of the applicable currencies shall be specified. For this purpose, reference shall be made to the actual or expected currency proportions of the Cost of the varied work, and to the proportions of various currencies specified for payment of the Contract Price.

13.5 Provisional Sums

13.5.1 Each Provisional Sum shall only be used, in whole or in part, in accordance with the Engineer's instructions, and the Contract Price shall be adjusted accordingly. The total sum paid to the Contractor shall include only such amounts, for the work, supplies or services to which the Provisional Sum relates, as the Engineer shall have instructed. For each Provisional Sum, the Engineer may instruct:

a) Work to be executed (including Plant, Materials or services to be supplied) by the Contractor and valued under Sub-Clause 13.3 [Variation Procedure]; and/or

b) Plant, Materials or services to be purchased by the Contractor, from a nominated Subcontractor (as defined in Clause 5 [Nominated Subcontractors]) or otherwise; and for which there shall be included in the Contract Price:

   i) The actual amounts paid (or due to be paid) by the Contractor, and

   ii) A sum for overhead charges and profit, calculated as a percentage of these actual amounts

by applying the relevant percentage rate (if any) stated in the appropriate Schedule.

iii) If there is no such rate, the percentage rate stated in the **SCC** shall be applied.

13.5.2 The Contractor shall, when required by the Engineer, produce quotations, invoices, vouchers and accounts or receipts in substantiation.

13.6 Daywork

13.6.1 For work of a minor or incidental nature, the Engineer may instruct that a Variation shall be executed on a daywork basis. The work shall then be valued in accordance with the Daywork Schedule included in the Contract, and the following procedure shall apply. If a Daywork Schedule is not included in the Contract, this Sub- Clauses Hall not apply.

Before ordering Goods for the work, the Contractor shall submit quotations to the Engineer. When applying for payment, the Contractor shall submit invoices, vouchers and accounts or receipts for any Goods.

13.6.2 Except for any items for which the Daywork Schedule specifies that payment is not due, the Contractor shall deliver each day to the Engineer accurate statements in duplicate which shall include the following details of the resources used in executing the previous day's work:

a) The names, occupations and time of Contractor's Personnel,

b) The identification, type and time of Contractor's Equipment and Temporary Works, and

c) The quantities and types of Plant and Materials used.

13.6.3 One copy of each statement will, if correct, or when agreed, be signed by the Engineer and returned to the Contractor. The Contractor shall then submit priced statements of these resources to the Engineer, prior to their inclusion in the next Statement under Sub-Clause 14.3 [Application for Interim Payment Certificates].

13.7 Adjustments for Changes in Legislation

13.7.1 The Contract Price shall be adjusted to take account of any increase or decrease in Cost resulting from a change in the Laws of the Country (including the introduction of new Laws and the repeal or modification of existing Laws) or in the judicial or official governmental interpretation of such Laws, made after the Base Date, which affect the Contractor in the performance of obligations under the Contract.

13.7.2 If the Contract or suffers (or will suffer) delay and/or incurs (or will incur) additional Cost as a result of these changes in the Laws or in such interpretations, made after the Base Date, the Contractor shall give notice to the Engineer and shall be entitled subject to Sub-Clause 20.1 [Contractor's Claims] to:

a) An extension of time for any such delay, if completion is or will be delayed, under Sub-Clause 8.4 [Extension of Time for Completion], and

b) Payment of any such Cost, which shall be included in the Contract Price.

After receiving this notice, the Engineer shall proceed in accordance with Sub-Clause 3.5 [Determinations] to agree or determine these matters.

13.7.3 Notwithstanding the foregoing, the Contractor shall not be entitled to an extension of time if the relevant delay has already been taken into account in the determination of a previous extension of time and such Cost shall not be separately paid if the same shall already have been taken into account in the indexing of any inputs to the table of adjustment data in accordance with the provisions of Sub-Clause
13.8 [Adjustments for Changes in Cost].

13.8 Adjustments for Changes in Cost

13.8.1 In this Sub-Clause, "table of adjustment data" means the completed table of adjustment data for local and foreign currencies included in the Schedules. If there is no such table of adjustment data, this Sub- Clause shall not apply.

13.8.2 If this Sub-Clause applies, the amounts payable to the Contractor shall be adjusted for rises or falls in the cost of labor, Goods and other inputs to the Works, by the addition or deduction of the amounts determined by the formulae prescribed in this Sub-Clause. To the extent that full compensation for any rise or fall in Costs is not covered by the provisions of this or other Clauses, the Accepted Contract Amount shall be deemed to have included amounts to cover the contingency of other rises and falls in costs.

13.8.3 The adjustment to be applied to the amount otherwise payable to the Contractor, as valued in accordance with the appropriate Schedule and certified in Payment Certificates, shall be determined from formulae for each of the currencies in which the Contract Price is payable. No adjustment is to be applied to work valued on the basis of Cost or current prices. The formulae shall be of the following general type:

Pn = a + b Ln/ Lo + c En/Eo + d Mn/Mo + ... where:

"Pn" is the adjustment multiplier to be applied to the estimated contract value in the relevant currency of the work carried out in period "n", this period being a month unless otherwise stated in the **SCC**;

"a" is a fixed coefficient, stated in the relevant table of adjustment data, representing the non-adjustable portion in contractual payments;

"b", "c", "d", … are coefficients representing the estimated proportion of each cost element related to the execution of the Works, as stated in the relevant table of adjustment data; such tabulated cost elements may be indicative of resources such as labor, equipment and materials;

"Ln", "En", "Mn", … are the current cost indices or reference prices for period "n", expressed in the relevant currency of payment, each of which is applicable to the relevant tabulated cost element on the date 49 days prior to the last day of the period (to which the particular Payment Certificate relates); and

"Lo", "Eo", "Mo" … are the base cost indices or reference prices, expressed in the relevant currency of payment, each of which is applicable to the relevant tabulated cost element on the Base Date.

13.8.4 The cost indices or reference prices stated in the table of adjustment data shall be used. If their source is in doubt, it shall be determined by the Engineer. For this purpose, reference shall be made to the values of the indices at stated dates (quoted in the fourth and fifth columns respectively of the table) for the purposes of clarification of the source; although these dates (and thus these values) may not correspond to the base cost indices.

13.8.5 In cases where the "currency of index" is not the relevant currency of payment, each index shall be converted into the relevant currency of payment at the selling rate, established by the central Procuring Entity of the Country, of this relevant currency on the above date for which the index is required to be applicable.

13.8.6 Until such time as each current cost index is available, the Engineer shall determine a provisional index for the issue of Interim Payment Certificates. When a current cost index is available, the adjustment shall be recalculated accordingly.

13.8.7 If the Contractor fails to complete the Works within the Time for Completion, adjustment of prices thereafter shall be made using either (i) each index or price applicable on the date 49 days prior to the expiry of the Time for Completion of the Works, or (ii) the current index or price, whichever is more favorable to the Procuring Entity.

13.8.8 The weightings (coefficients) for each of the factors of cost stated in the table(s) of adjustment data shall

only be adjusted if they have been rendered unreasonable, unbalanced or inapplicable, as a result of Variations.

14. CONTRACT PRICE AND PAYMENT

14.1 The Contract Price

14.1.1 Unless otherwise stated in the Particular Conditions:

a) the Contract Price shall be agreed or determined under Sub-Clause 12.3 [Evaluation] and be subject to adjustments in accordance with the Contract;

b) the Contractor shall pay all taxes, duties and fees required to be paid by him under the Contract, and the Contract Price shall not be adjusted for any of these costs except as stated in Sub-Clause 13.7 [Adjustments for Changes in Legislation];

c) any quantities which may be set out in the Bills of Quantities or other Schedule are estimated quantities and are not to be taken as the actual and correct quantities:

   i) of the Works which the Contractor is required to execute, or

   ii) for the purposes of Clause 12 [Measurement and Evaluation]; and

d) the Contractor shall submit to the Engineer, within 30 days after the Commencement Date, a proposed breakdown of each lumpsum price in the Schedules.

14.1.2 The Engineer may take account of the breakdown when preparing Payment Certificates, but shall not be bound by it.

14.1.3 Notwithstanding the provisions of subparagraph (b), Contractor's Equipment, including essential spare parts there for, imported by the Contractor for the sole purpose of executing the Contract shall be exempt from the payment of import duties and taxes upon importation.

14.2 Advance Payment

14.2.1 The Procuring Entity shall make an advance payment, as an interest- free loan for mobilization and cashflow support, when the Contractor submits a guarantee in accordance with this Sub-Clause. The total advance payment, the number and timing of instalments (if more than one), and the applicable currencies and proportions, shall be as stated in the **SCC**. Unless and until the Procuring Entity receives this guarantee, or if the total advance payment is not stated in the **SCC**, this Sub-Clause shall not apply.

14.2.2 The Engineer shall deliver to the Procuring Entity and to the Contractor an Interim Payment Certificate for the advance payment or its first instalment after receiving a Statement (under Sub-Clause 14.3 [Application for Interim Payment Certificates]) and after the Procuring Entity receives (i) the Performance Security in accordance with Sub-Clause 4.2 [Performance Security] and (ii) a guarantee in amounts and currencies equal to the advance payment. This guarantee shall be issued by a reputable Procuring Entity or financial institution selected by the Contractor and shall be in the form annexed to the Particular Conditions or in another form approved by the Procuring Entity.

14.2.3 The Contractor shall ensure that the guarantee is valid and enforceable until the advance payment has been repaid, but its amount shall be progressively reduced by the amount repaid by the Contractor as indicated in the Payment Certificates. If the terms of the guarantee specify its expiry date, and the advance payment has not been repaid by the date 30 days prior to the expiry date, the Contractor shall extend the validity of the guarantee until the advance payment has been repaid.

14.2.4 Unless stated otherwise in the SCC, the advance payment shall be repaid through percentage deductions from the interim payments determined by the Engineer in accordance with Sub-Clause 14.6 [Issue of Interim Payment Certificates], as follows:

a) Deductions shall commence in the next interim Payment Certificate following that in which the total of all certified interim payments (excluding the advance payment and deductions and repayments of retention) exceeds 30 percent (30%) of the Accepted Contract Amount less Provisional Sums; and

b) Deductions shall be made at the amortization rate stated in the **SCC** of the amount of each Interim Payment Certificate (excluding the advance payment and deductions for its repayments as well as deductions for retention money) in the currencies and proportions of the advance payment until such time as the advance payment has been repaid; provided that the advance payment shall be completely repaid prior to the time when 90 percent (90%) of the Accepted Contract Amount less Provisional Sums has been certified for payment.

14.2.5 If the advance payment has not been repaid prior to the issue of the Taking-Over Certificate for the Works or prior to termination under Clause 15 [Termination by Procuring Entity], Clause 16 [Suspension and

Termination by Contractor] or Clause 19 [Force Majeure] (as the case may be), the whole of the balance then outstanding shall immediately become due and in case of termination under Clause 15 [Termination by Procuring Entity], except for Sub-Clause 15.5 [Procuring Entity's Entitlement to Termination for Convenience], payable by the Contractor to the Procuring Entity.

14.3 Application for Interim Payment Certificates

14.3.1 The Contractor shall submit a Statement in six copies to the Engineer after the end of each month, in a form approved by the Engineer, showing in detail the amounts to which the Contractor considers itself to been titled, together with supporting documents which shall include the report on the progress during this month in accordance with Sub-Clause 4.21 [Progress Reports].

14.3.2 The Statement shall include the following items, as applicable, which shall be expressed in the various currencies in which the Contract Price is payable, in the sequence listed:

a) the estimated contract value of the Works executed and the Contractor's Documents produced up to the end of the month (including Variations but excluding items described in sub-paragraphs (b) to (g) below);
b) any amounts to be added and deducted for changes in legislation and changes in cost, in accordance with Sub-Clause 13.7 [Adjustments for Changes in Legislation] and Sub-Clause 13.8 [Adjustments for Changes in Cost];
c) any amount to be deducted for retention, calculated by applying the percentage of retention stated in the **SCC** to the total of the above amounts, until the amount so retained by the Procuring Entity reaches the limit of Retention Money (if any) stated in the **SCC**;
d) any amounts to be added for the advance payment and (if more than one instalment) and to be deducted for its repayments in accordance with Sub-Clause 14.2 [Advance Payment];
e) any amounts to be added and deducted for Plant and Materials in accordance with Sub-Clause14.5[Plant and Materials intended for the Works];
f) any other additions or deductions which may have become due under the Contract or otherwise, including those under Clause 20 [Claims, Disputes and Arbitration]; and
g) the deduction of amounts certified in all previous Payment Certificates.

14.3.3 Where the contract price is different from the corrected tender price, in order to ensure the contractor is not paid less or more relative to the contract price (*which would be the tender price*), payment valuation certificates and variation orders on omissions and additions valued based on rates in the Bill of Quantities or schedule of rates in the Tender, will be adjusted by a plus or minus percentage. The percentage already worked out during tender evaluation is worked out as follows: *(corrected tender price–tender price)/tender priceX100*.

14.4 Schedule of Payments

14.4.1 If the Contract includes a schedule of payments specifying the instalments in which the Contract Price will be paid, then unless otherwise stated in this schedule:

a) The instalments quoted in this schedule of payments shall be the estimated contract values for the purposes of sub-paragraph (a) of Sub-Clause 14.3 [Application for Interim Payment Certificates];
b) Sub-Clause14.5[Plant and Materials intended for the Works] shall not apply; and
c) If these instalments are not defined by reference to the actual progress achieved in executing the Works, and if actual progress is found to be less or more than that on which this schedule of payments was based, then the Engineer may proceed in accordance with Sub-Clause 3.5 [Determinations] to agree or determine revised instalments, which shall take account of the extent to which progress is less or more than that on which the instalments were previously based.

14.4.2 If the Contract does not include a schedule of payments, the Contractor shall submit non-binding estimates of the payments which he expects to become due during each quarterly period. The first estimate shall be submitted within 42 days after the Commencement Date. Revised estimates shall be submitted at quarterly intervals, until the Taking-Over Certificate has been issued for the Works.

14.5 Plant and Materials intended for the Works *(see SCC for lists)*

14.5.1 If this Sub-Clause applies, Interim Payment Certificates shall include, under sub-paragraph (e) of Sub-Clause 14.3, (i) an amount for Plant and Materials which have been sent to the Site for incorporation in the Permanent Works, and (ii) a reduction when the contract value of such Plant and Materials is included as part of the Permanent Works under sub-paragraph (a) of Sub-Clause 14.3 [Application for Interim Payment

Certificates].

14.5.2 If the lists referred to in sub-paragraphs (b) (i) or (c) (i) below are not included in the Schedules, this Sub-Clause shall not apply. The Engineer shall determine and certify each addition if the following conditions are satisfied:

a) The Contractor has:
   i) Kept satisfactory records (including the orders, receipts, Costs and use of Plant and Materials) which are available for inspection, and
   ii) Submitted a statement of the Cost of acquiring and delivering the Plant and Materials to the Site, supported by satisfactory evidence; and either:

b) The relevant Plant and Materials:
   i) Are those listed in the Schedules for payment when shipped,
   ii) Have been shipped to the Country, enroute to the Site, in accordance with the Contract; and
   iii) are described in a clean shipped bill of lading or other evidence of shipment, which has been submitted to the Engineer together with evidence of payment of freight and insurance, any other documents reasonably required, and an Procuring Entity guarantee in a form and issued by an entity approved by the Procuring Entity in amounts and currencies equal to the amount due under this Sub-Clause: this guarantee may be in a similar form to the form referred to in Sub-Clause 14.2[Advance Payment] and shall be valid until the Plant and Materials are properly stored on Site and protected against loss, damage or deterioration;

c) the relevant Plant and Materials:
   i) are those listed in the Schedules for payment when delivered to the Site, and
   ii) have been delivered to and are properly stored on the Site, are protected against loss, damage or deterioration, and appear to be in accordance with the Contract.

14.5.3 The additional amount to be certified shall be the equivalent of eighty percent (80%) of the Engineer's determination of the cost of the Plant and Materials (including delivery to Site), taking account of the documents mentioned in this Sub-Clause and of the contract value of the Plant and Materials.

14.5.4 The currencies for this additional amount shall be the same as those in which payment will become due when the contract value is included under sub-paragraph (a) of Sub-Clause 14.3 [Application for Interim Payment Certificates]. At that time, the Payment Certificate shall include the applicable reduction which shall be equivalent to, and in the same currencies and proportions as, this additional amount for the relevant Plant and Materials.

14.6 Issue of Interim Payment Certificates

14.6.1 No amount will be certified or paid until the Procuring Entity has received and approved the Performance Security. Thereafter, the Engineer shall, within 30 days after receiving a Statement and supporting documents, deliver to the Procuring Entity and to the Contractor an Interim Payment Certificate which shall state the amount which the Engineer fairly determines to be due, with all supporting particulars for any reduction or withholding made

However, prior to issuing the Taking-Over Certificate for the Works, the Engineer shall not be bound to issue an Interim Payment Certificate in an amount which would (after retention and other deductions) be less than the minimum amount of Interim Payment Certificates (if any) stated in the **SCC**. In this event, the Engineer shall give notice to the Contractor accordingly.

14.6.2 An Interim Payment Certificate shall not be withheld for any other reason, although:

a) if anything supplied or work done by the Contractor is not in accordance with the Contract, the cost of rectification or replacement may be withheld until rectification or replacement has been completed; and/or
b) if the Contractor was or is failing to perform any work or obligation in accordance with the Contract, and had been so notified by the Engineer, the value of this work or obligation may be withheld until the work or obligation has been performed.

14.6.3 The Engineer may in any Payment Certificate make any correction or modification that should properly be made to any previous Payment Certificate. A Payment Certificate shall not be deemed to indicate the Engineer's acceptance, approval, consent or satisfaction.

14.7 Payment

14.7.1 The Procuring Entity shall pay to the Contractor:

a) The first instalment of the advance payment within 42 days after issuing the Letter of Acceptance or within 21 days after receiving the documents in accordance with Sub-Clause 4.2 [Performance Security] and Sub-Clause 14.2 [Advance Payment], whichever is later;

b) the amount certified in each Interim Payment Certificate within 56 days after the Engineer receives the Statement and supporting documents; or, at a time when the Procuring Entity's loan or credit (from which part of the payments to the Contractor is being made) is suspended, the amount shown on any statement submitted by the Contractor within 14 days after such statement is submitted, any discrepancy being rectified in the next payment to the Contractor; and

c) the amount certified in the Final Payment Certificate within 56 days after the Procuring Entity receives this Payment Certificate; or, at a time when the Procuring Entity's loan or credit (from which part of the payments to the Contractor is being made) is suspended, the undisputed amount shown in the Final Statement within 56 days after the date of notification of the suspension in accordance with Sub-Clause 16.2 [Termination by Contractor].

14.7.2 Payment of the amount due in each currency shall be made in to the Procuring Entity account, nominated by the Contractor, in the payment country (for this currency) specified in the Contract.

14.8 Delayed Payment

14.8.1 If the Contractor does not receive payment in accordance with Sub-Clause 14.7 [Payment], the Contractor shall be entitled to receive financing charges compounded monthly on the amount unpaid during the period of delay. This period shall be deemed to commence on the date for payment specified in Sub-Clause 14.7 [Payment], irrespective (in the case of its sub-paragraph (b)) of the date on which any Interim Payment Certificate is issued.

14.8.2 Unless otherwise stated in the Particular Conditions, these financing charges shall be calculated at the annual rate of three percentage points above the discount rate of the central Procuring Entity in the country of the currency of payment, or if not available, the inter-Procuring Entity offered rate, and shall be paid in such currency.

The Contractor shall be entitled to this payment without formal notice or certification, and without prejudice to any other right or remedy.

14.9 Payment of Retention Money

14.9.1 When the Taking-Over Certificate has been issued for the Works, the first half of the Retention Money shall be certified by the Engineer for payment to the Contractor. If a Taking-Over Certificate is issued for a Section or part of the Works, a proportion of the Retention Money shall be certified and paid. This proportion shall be half (50%) of the proportion calculated by dividing the estimated contract value of the Section or part, by the estimated final Contract Price.

14.9.2 Promptly after the latest of the expiry dates of the Defects Notification Periods, the outstanding balance of the Retention Money shall be certified by the Engineer for payment to the Contractor. If a Taking-Over Certificate was issued for a Section, a proportion of the second half of the Retention Money shall be certified and paid promptly after the expiry date of the Defects Notification Period for the Section. This proportion shall be half (50%) of the proportion calculated by dividing the estimated contract value of the Section by the estimated final Contract Price.

14.9.3 However, if any work remains to be executed under Clause 11 [Defects Liability], the Engineer shall be entitled to withhold certification of the estimated cost of this work until it has been executed.

14.9.4 When calculating these proportions, no account shall be taken of any adjustments under Sub-Clause 13.7 [Adjustments for Changes in Legislation] and Sub-Clause 13.8 [Adjustments for Changes in Cost].

14.9.5 Unless otherwise stated in the Particular Conditions, when the Taking-Over Certificate has been issued for the Works and the first half of the Retention Money has been certified for payment by the Engineer, the Contractor shall be entitled to substitute a guarantee, in the form annexed to the Particular Conditions or in another form approved by the Procuring Entity and issued by a reputable Procuring Entity or financial institution selected by the Contractor, for the second half of the Retention Money. The Contractor shall ensure that the guarantee is in the amounts and currencies of the second half of the Retention Money and is valid and enforceable until the Contract or has executed and completed the Works and remedied any defects, as

specified for the Performance Security in Sub-Clause 4.2. On receipt by the Procuring Entity of the required guarantee, the Engineer shall certify and the Procuring Entity shall pay the second half of the Retention Money. The release of the second half of the Retention Money against a guarantee shall then be in lieu of the release under the second paragraph of this Sub-Clause. The Procuring Entity shall return the guarantee to the Contractor within 21 days after receiving a copy of the Performance Certificate.

14.9.6 If the Performance Security required under Sub-Clause 4.2 is in the form of a demand guarantee, and the amount guaranteed under it when the Taking-Over Certificate is issued is more than half of the Retention Money, then the Retention Money guarantee will not be required. If the amount guaranteed under the Performance Security when the Taking-Over Certificate is issued is less than half of the Retention Money, the Retention Money guarantee will only be required for the difference between half of the Retention Money and the amount guaranteed under the Performance Security.

14.10 Statement at Completion

Within 84 days after receiving the Taking-Over Certificate for the Works, the Contractor shall submit to the Engineer six copies of a Statement at completion with supporting documents, in accordance with Sub-Clause
14.3 [Application for Interim Payment Certificates], showing:

a) the value of all work done in accordance with the Contract up to the date stated in the Taking-Over Certificate for the Works,
b) any further sums which the Contractor considers to be due, and
c) an estimate of any other amounts which the Contractor considers will become due to him under the Contract. Estimated amounts shall be shown separately in this Statement at completion.

The Engineer shall then certify in accordance with Sub-Clause 14.6 [Issue of Interim Payment Certificates].

14.11 Application for Final Payment Certificate

14.11.1 Within 56 days after receiving the Performance Certificate, the Contractor shall submit, to the Engineer, six copies of a draft final statement with supporting documents showing in detail in a form approved by the Engineer:

a) The value of all work done in accordance with the Contract, and
b) Any further sums which the Contractor considers to be due to him under the Contractor otherwise.

14.11.2 If the Engineer disagrees with or cannot verify any part of the draft final statement, the Contractor shall submit such further information as the Engineer may reasonably require within 30 days from receipt of said draft and shall make such changes in the draft as may be agreed between them. The Contractor shall then prepare and submit to the Engineer the final statement as agreed. This agreed statement is referred to in these Conditions as the “Final Statement”.

14.11.3 However, if, following discussions between the Engineer and the Contractor and any changes to the draft final statement which are agreed, it becomes evident that a dispute exists, the Engineer shall deliver to the Procuring Entity (with a copy to the Contractor) an Interim Payment Certificate for the agreed parts of the draft final statement. Thereafter, if the dispute is finally resolved under Sub-Clause 20.4 [Obtaining Dispute Board's Decision] or Sub-Clause 20.5 [Amicable Settlement], the Contractor shall then prepare and submit to the Procuring Entity (with a copy to the Engineer) a Final Statement.

14.12 Discharge

When submitting the Final Statement, the Contractor shall submit a discharge which confirms that the total of the Final Statement represents full and final settlement of all moneys due to the Contractor under or in connection with the Contract. This discharge may state that it becomes effective when the Contractor has received the Performance Security and the outstanding balance of this total, in which event the discharge shall be effective on such date.

14.13 Issue of Final Payment Certificate

14.13.1 Within 30 days after receiving the Final Statement and discharge in accordance with Sub-Clause 14.11 [Application for Final Payment Certificate] and Sub-Clause 14.12 [Discharge], the Engineer shall deliver, to the Procuring Entity and to the Contractor, the Final Payment Certificate which shall state:

(a) The amount which he fairly determines is finally due, and

(b) After giving credit to the Procuring Entity for all amounts previously paid by the Procuring Entity and for all sums to which the Procuring Entity is entitled, the balance (if any) due from the Procuring Entity to the Contractor or from the Contractor to the Procuring Entity, as the case may be.

14.13.1 If the Contractor has not applied for a Final Payment Certificate in accordance with Sub-Clause 14.11 [Application for Final Payment Certificate] and Sub-Clause 14.12 [Discharge], the Engineer shall request the Contractor to do so. If the Contractor fails to submit an application within a period of 30 days, the Engineer shall issue the Final Payment Certificate for such amount as he fairly determines to be due.

14.14 Cessation of Procuring Entity's Liability

14.14.1 The Procuring Entity shall not be liable to the Contractor for any matter or thing under or in connection with the Contract or execution of the Works, except to the extent that the Contractor shall have included an amount expressly for it:

a) In the Final Statement and also
b) (Except for matters or things arising after the issue of the Taking-Over Certificate for the Works) in the Statement at completion described in Sub-Clause 14.10[Statement at Completion].

14.14.2 However, this Sub-Clause shall not limit the Procuring Entity's liability under his indemnification obligations, or the Procuring Entity's liability in any case of fraud, deliberate default or reckless misconduct by the Procuring Entity.

14.15 Currencies of Payment

The Contract Price shall be paid in the currency or currencies named in the Schedule of Payment Currencies. If more than one currency is so named, payments shall be made as follows:

a) If the Accepted Contract Amount was expressed in Local Currency only:
   (i) The proportions or amounts of the Local and Foreign Currencies, and the fixed rates of exchange to be used for calculating the payments, shall be as stated in the Schedule of Payment Currencies, except as otherwise agreed by both Parties;
   ii) payments and deductions under Sub-Clause 13.5 [Provisional Sums] and Sub-Clause 13.7 [Adjustments for Changes in Legislation] shall be made in the applicable currencies and proportions; and
   iii) other payments and deductions under sub-paragraphs (a) to (d) of Sub-Clause 14.3 [Application for Interim Payment Certificates] shall be made in the currencies and proportions specified in sub-paragraph (a) (i) above;
b) payment of the damages specified in the **SCC**, shall be made in the currencies and proportions specified in the Schedule of Payment Currencies;
c) other payments to the Procuring Entity by the Contractor shall be made in the currency in which the sum was expended by the Procuring Entity, or in such currency as may be agreed by both Parties;
d) if any amount payable by the Contractor to the Procuring Entity in a particular currency exceeds the sum payable by the Procuring Entity to the Contractor in that currency, the Procuring Entity may recover the balance of this amount from the sums otherwise payable to the Contractor in other currencies; and
e) if no rates of exchange are stated in the Schedule of Payment Currencies, they shall be those prevailing on the Base Date and determined by the central Procuring Entity of the Country.

15. TERMINATION BY PROCURING ENTITY

15.1 Notice to Correct

If the Contractor fails to carry out any obligation under the Contract, the Engineer may by notice require the Contractor to make good the failure and to remedy it within a specified reasonable time.

15.2 Termination by Procuring Entity

15.2.1 The Procuring Entity shall be entitled to terminate the Contract if the Contractor:

a) fails to comply with Sub-Clause 4.2 [Performance Security] or with a notice under Sub-Clause 15.1 [Notice to Correct],
b) abandons the Works or otherwise plainly demonstrates the intention not to continue performance of his obligations under the Contract,

c) without reasonable excuse fails:
   (i) to proceed with the Works in accordance with Clause 8 [Commencement, Delays and Suspension], or
   ii) to comply with a notice issued under Sub-Clause 7.5 [Rejection] or Sub-Clause 7.6 [Remedial Work], within 30 days after receiving it,
d) subcontracts the whole of the Works or as signs the Contract without the required agreement,
e) becomes bankrupt or insolvent, goes into liquidation, has a receiving or administration order made against him, compounds with his creditors, or carries on business under a receiver, trustee or manager for the benefit of his creditors, or if any act is done or event occurs which (under applicable Laws) has a similar effect to any of these acts or events, or
f) gives or offers to give (directly or indirectly) to any person any bribe, gift, gratuity, commission or other thing of value, as an inducement or reward:
   i) for doing or forbearing to do any action in relation to the Contract, or
   ii) for showing or for bearing to show favor or disfavor to any person in relation to the Contract, or if any of the Contractor's Personnel, agents or Subcontractors gives or offers to give (directly or indirectly) to any person any such inducement or reward as is described in this sub-paragraph (f). However, lawful inducements and rewards to Contractor's Personnel shall not entitle termination, or
g) based on reasonable evidence, has engaged in Fraud and Corruption as defined in paragraph 2.2 of the Appendix B to these General Conditions, in competing for or in executing the Contract.

15.2.2 In any of these events or circumstances, the Procuring Entity may, upon giving 14 days' notice to the Contractor, terminate the Contract and expel the Contractor from the Site. However, in the case of sub-paragraph (e) or (f) or (g), the Procuring Entity may by notice terminate the Contract immediately.

15.2.3 The Procuring Entity's election to terminate the Contract shall not prejudice any other rights of the Procuring Entity, under the Contract or otherwise.

The Contractor shall then leave the Site and deliver any required Goods, all Contractor's Documents, and other design documents made by or for him, to the Engineer. However, the Contractor shall use his lowest efforts to comply immediately with any reasonable instructions included in the notice (i) for the assignment of any subcontract, and (ii) for the protection of life or property or for the safety of the Works.

After termination, the Procuring Entity may complete the Works and/or arrange for any other entities to do so. The Procuring Entity and these entities may then use any Goods, Contractor's Documents and other design documents made by or on behalf of the Contractor.

The Procuring Entity shall then give notice that the Contractor's Equipment and Temporary Works will be released to the Contractor at or near the Site. The Contractor shall promptly arrange their removal, at the risk and cost of the Contractor. However, if by this time the Contractor has failed to make a payment due to the Procuring Entity, these items may be sold by the Procuring Entity in order to recover this payment. Any balance of the proceeds shall then be paid to the Contractor.

15.3 Valuation at Date of Termination

As soon as practicable after a notice of termination under Sub-Clause 15.2 [Termination by Procuring Entity] has taken effect, the Engineer shall proceed in accordance with Sub-Clause 3.5 [Determinations] to agree or determine the value of the Works, Goods and Contractor's Documents, and any other sums due to the Contractor for work executed in accordance with the Contract.

15.4 Payment after Termination

After a notice of termination under Sub-Clause 15.2 [Termination by Procuring Entity] has taken effect, the Procuring Entity may:

a) Proceed in accordance with Sub-Clause 2.5 [Procuring Entity's Claims],
b) Withhold further payments to the Contractor until the costs of execution, completion and remedying of any defects, damages for delay in completion (if any), and all other costs incurred by the Procuring Entity, have been established, and/or
c) Recover from the Contractor any losses and damages incurred by the Procuring Entity and any extra costs of completing the Works, after allowing for any sum due to the Contractor under Sub-Clause 15.3 [Valuation at Date of Termination]. After recovering any such losses, damages and extra costs, the Procuring Entity shall pay any balance to the Contractor.

15.5 Procuring Entity's Entitlement to Termination for Convenience

15.5.1 The Procuring Entity shall be entitled to terminate the Contract, at any time for the Procuring Entity's convenience, by giving notice of such termination to the Contractor. The termination shall take effect 30 days after the later of the dates on which the Contractor receives this notice or the Procuring Entity returns the Performance Security. The Procuring Entity shall not terminate the Contract under this Sub-Clause in order to execute the Works itself or to arrange for the Works to be executed by another contractor or to avoid a termination of the Contract by the Contractor under Clause 16.2[Termination by Contractor].

15.5.2 After this termination, the Contractor shall proceed in accordance with Sub-Clause 16.3 [Cessation of Work and Removal of Contractor's Equipment] and shall be paid in accordance with Sub-Clause 16.4 [Payment on Termination].

15.6 Fraud and Corruption

The Procuring Entity requires compliance with the national law and regulations against corruption. All available sanctions will apply where corruption is detected.

16. SUSPENSION AND TERMINATION BY CONTRACTOR

16.1 Contractor's Entitlement to Suspend Work

16.1.1 If the Engineer fails to certify in accordance with Sub-Clause 14.6 [Issue of Interim Payment Certificates] or the Procuring Entity fails to comply with Sub-Clause 2.4 [Procuring Entity's Financial Arrangements] or Sub- Clause 14.7 [Payment], the Contractor may, after giving not less than 21days' notice to the Procuring Entity, suspend work (or reduce the rate of work) unless and until the Contractor has received the Payment Certificate, reasonable evidence or payment, as the case may be and as described in the notice.

16.1.2 Notwithstanding the above, if the Procuring Entity has suspended disbursements under the loan or credit from which payments to the Contractor are being made, in whole or in part, for the execution of the Works, and no alternative funds are available as provided for in Sub-Clause 2.4 [Procuring Entity's Financial Arrangements], the Contractor may by notice suspend work or reduce the rate of work at any time, but not less than 7 days after the Procuring Entity having received the suspension notification from the Procuring Entity.

16.1.3 The Contractor's action shall not prejudice his entitlements to financing charges under Sub-Clause 14.8 [Delayed Payment] and to termination under Sub-Clause 16.2[Termination by Contractor].

16.1.4 If the Contractor subsequently receives such Payment Certificate, evidence or payment (as described in the relevant Sub-Clause and in the above notice) before giving a notice of termination, the Contractor shall resume normal working as soon as is reasonably practicable.

16.1.5 If the Contractor suffers delay and/or incurs Cost as a result of suspending work (or reducing the rate of work) in accordance with this Sub-Clause, the Contractor shall give notice to the Engineer and shall be entitled subject to Sub-Clause 20.1 [Contractor's Claims] to:

a) an extension of time for any such delay, if completion is or will be delayed, under Sub-Clause 8.4 [Extension of Time for Completion], and
b) payment of any such Cost-plus profit, which shall be included in the Contract Price.

16.1.6 After receiving this notice, the Engineers Hall proceed in accordance with Sub-Clause 3.5 [Determinations] to agree or determine these matters.

16.2 Termination by Contractor

16.2.1 The Contractor shall be entitled to terminate the Contract if:

a) the Contractor does not receive the reasonable evidence within 42 days after giving notice under Sub-Clause 16.1 [Contractor's Entitlement to Suspend Work] in respect of a failure to comply with Sub-Clause 2.4 [Procuring Entity's Financial Arrangements],
b) the Engineer fails, within 56 days after receiving a Statement and supporting documents, to issue the relevant Payment Certificate,
c) the Contractor does not receive the amount due under an Interim Payment Certificate within 42 days after the expiry of the time stated in Sub-Clause 14.7 [Payment] within which payment is to be made (except for deductions in accordance with Sub-Clause 2.5 [Procuring Entity's Claims]),

d) the Procuring Entity substantially fails to perform his obligations under the Contract in such manner as to materially and adversely affect the economic balance of the Contract and/or the ability of the Contractor to perform the Contract,

e) the Procuring Entity fails to comply with Sub-Clause 1.6 [Contract Agreement] or Sub-Clause 1.7 [Assignment],

f) a prolonged suspension affects the whole of the Works as described in Sub-Clause 8.11 [Prolonged Suspension], or

g) the Procuring Entity becomes bankrupt or insolvent, goes into liquidation, has a receiving or administration order made against him, compounds with his creditors, or carries on business under a receiver, trustee or manager for the benefit of his creditors, or if any act is done or event occurs which (under applicable Laws) has a similar effect to any of these acts or events.

h) The Contractor does not receive the Engineer's instruction recording the agreement of both Parties on the fulfilment of the conditions for the Commencement of Works under Sub-Clause 8.1 [Commencement of Works.

16.2.2 In any of these events or circumstances, the Contractor may, upon giving 14 days' notice to the Procuring Entity, terminate the Contract. However, in the case of sub-paragraph (f) or (g), the Contractor may by notice terminate the Contract immediately.

16.2.3 In the event the Procuring Entity suspends the loan or credit from which part or whole of the payments to the Contractor are being made, if the Contractor has not received the sums due to him upon expiration of the14 days referred to in Sub-Clause 14.7 [Payment] for payments under Interim Payment Certificates, the Contractor may, without prejudice to the Contractor's entitlement to financing charges under Sub-Clause14.8 [Delayed Payment], take one of the following actions, namely (i) suspend work or reduce the rate of work under Sub-Clause 16.1 above, or (ii) terminate the Contract by giving notice to the Procuring Entity, with a copy to the Engineer, such termination to take effect 14 days after the giving of the notice.

The Contractor's election to terminate the Contract shall not prejudice any other rights of the Contractor, under the Contract or otherwise.

16.3 Cessation of Work and Removal of Contractor's Equipment

After a notice of termination under Sub-Clause 15.5 [Procuring Entity's Entitlement to Termination for Convenience], Sub-Clause 16.2 [Termination by Contractor] or Sub-Clause 19.6 [Optional Termination, Payment and Release] has taken effect, the Contractor shall promptly:

a) Cease all further work, except for such work as may have been instructed by the Engineer for the protection of life or property or for the safety of the Works,

b) Handover Contractor's Documents, Plant, Materials and other work, for which the Contractor has received payment, and

c) Remove all other Goods from the Site, except as necessary for safety, and leave the Site.

16.4 Payment on Termination

After a notice of termination under Sub-Clause 16.2 [Termination by Contractor] has taken effect, the Procuring Entity shall promptly:

a) Return the Performance Security to the Contractor,

b) Pay the Contractor in accordance with Sub-Clause 19.6 [Optional Termination, Payment and Release], and

c) Pay to the Contractor the amount of any loss or damage sustained by the Contractor as a result of this termination.

17. RISK AND RESPONSIBILITY

17.1 Indemnities

17.1.1 The Contractor shall indemnify and hold harmless the Procuring Entity, the Procuring Entity's Personnel, and their respective agents, against and from all claims, damages, losses and expenses (including legal fees and expenses) in respect of:

(a) Bodily injury, sickness, disease or death, of any person whatsoever arising out of or in the course of or by reason of the Contractor's design (if any), the execution and completion of the Works and the remedying of any defects, unless attributable to any negligence, willful actor breach of the Contract by the Procuring Entity, the Procuring Entity's Personnel, or any of the irrespective agents, and

(b) Damage to or loss of any property, real or personal (other than the Works), to the extent that such damage or loss arises out of or in the course of or by reason of the Contractor's design (if any), the execution and completion of the Works and the remedying of any defects, unless and to the extent that any such damage or loss is attributable to any negligence, willful act or breach of the Contract by the Procuring Entity, the Procuring Entity's Personnel, the irrespective agents, or any one directly or indirectly employed by any of them.

17.1.2 The Procuring Entity shall indemnify and hold harmless the Contractor, the Contractor's Personnel, and their respective agents, against and from all claims, damages, losses and expenses (including legal fees and expenses) in respect of (1) bodily injury, sickness, disease or death, which is attributable to any negligence, willful act or breach of the Contract by the Procuring Entity, the Procuring Entity's Personnel, or any of their respective agents, and (2) the matters for which liability may be excluded from insurance cover, as described in sub-paragraphs (d)(i), (ii) and (iii) of Sub-Clause 18.3 [Insurance Against Injury to Persons and Damage to Property].

17.2 Contractor's Care of the Works

17.2.1 The Contractor shall take full responsibility for the care of the Works and Goods from the Commencement Date until the Taking-Over Certificate is issued (or is deemed to be issued under Sub-Clause 10.1 [Taking Over of the Works and Sections]) for the Works, when responsibility for the care of the Works shall pass to the Procuring Entity. If a Taking-Over Certificate is issued (or is so deemed to be issued) for any Section or part of the Works, responsibility for the care of the Section or part shall then pass to the Procuring Entity.

17.2.2 After responsibility has accordingly passed to the Procuring Entity, the Contractor shall take responsibility for the care of any work which is outstanding on the date stated in a Taking-Over Certificate, until this outstanding work has been completed.

17.2.3 If any loss or damage happens to the Works, Goods or Contractor's Documents during the period when the Contractor is responsible for their care, from any cause not listed in Sub-Clause 17.3 [Procuring Entity's Risks], the Contractor shall rectify the loss or damage at the Contractor's risk and cost, so that the Works, Goods and Contractor's Documents conform with the Contract.

17.2.4 The Contractor shall be liable for any loss or damage caused by any actions performed by the Contractor after Taking-Over Certificate has been issued. The Contractor shall also be liable for any loss or damage which occurs after a Taking-Over Certificate has been issued and which arose from a previous event for which the Contractor was liable.

17.3 Procuring Entity's Risks

The risks referred to in Sub-Clause 17.4 [Consequences of Procuring Entity's Risks] below, insofar as they directly affect the execution of the Works in the Country, are:

a) war, hostilities (whether war be declared or not), invasion, act of foreign enemies,
b) rebellion, terrorism, sabotage by persons other than the Contractor's Personnel, revolution, insurrection, military or usurped power, or civil war, within the Country,
c) riot, commotion or disorder within the Country by persons other than the Contractor's Personnel,
d) munitions of war, explosive materials, ionizing radiation or contamination by radio-activity, within the Country, except as may be attributable to the Contractor's use of such munitions, explosives, radiation or radio-activity,
e) pressure waves caused by aircraft or other aerial devices traveling at sonic or supersonic speeds,

f) use or occupation by the Procuring Entity of any part of the Permanent Works, except as may be specified in the Contract,

g) design of any part of the Works by the Procuring Entity's Personnel or by others for whom the Procuring Entity is responsible, and

h) any operation of the forces of nature which is Unforeseeable or against which an experienced contractor could not reasonably have been expected to have taken adequate preventive precautions.

17.4 Consequences of Procuring Entity's Risks

17.4.1 If and to the extent that any of the risks listed in Sub-Clause 17.3 above results in loss or damage to the Works, Goods or Contractor's Documents, the Contractor shall promptly give notice to the Engineer and shall rectify this loss or damage to the extent required by the Engineer.

17.4.2 If the Contractor suffers delay and/or incurs Cost from rectifying this loss or damage, the Contractor shall give a further notice to the Engineer and shall be entitled subject to Sub-Clause 20.1[Contractor's Claims] to:

a) an extension of time for any such delay, if completion is or will be delayed, under Sub-Clause 8.4 [Extension of Time for Completion], and

b) payment of any such Cost, which shall be included in the Contract Price. In the case of sub-paragraphs (f) and (g) of Sub-Clause 17.3 [Procuring Entity's Risks], Cost plus profit shall be payable.

17.4.3 After receiving this further notice, the Engineer shall proceed in accordance with Sub-Clause 3.5 [Determinations] to agree or determine these matters.

17.5 Intellectual and Industrial Property Rights

17.5.1 In this Sub-Clause, “infringement” means an infringement (or alleged infringement) of any patent, registered design, copyright, trademark, tradename, trade secret or other intellectual or industrial property right relating to the Works; and “claim” means a claim (or proceedings pursuing a claim) alleging an infringement.

17.5.2 Whenever a Party does not give notice to the other Party of any claim within 30 days of receiving the claim, the first Party shall be deemed to have waived any right to indemnity under this Sub-Clause.

17.5.3 The Procuring Entity shall indemnify and hold the Contractor harmless against and from any claim alleging an infringement which is or was:

a) An unavoidable result of the Contractor's compliance with the Contract, or

b) A result of any Works being used by the Procuring Entity:

i) For a purpose other than that indicated by, or reasonably to be inferred from, the

ii) Contract, or

iii) In conjunction with anything not supplied by the Contractor, unless such use was disclosed to the Contractor prior to the Base Date or is stated in the Contract.

17.5.4 The Contractor shall indemnify and hold the Procuring Entity harmless against and from any other claim which arises out of or in relation to (i) the manufacture, use, sale or import of any Goods, or (ii) any design for which the Contractor is responsible.

17.5.5 If a Party is entitled to be indemnified under this Sub-Clause, the indemnifying Party may (at its cost) conduct negotiations for the settlement of the claim, and any litigation or arbitration which may arise from it. The other Party shall, at the request and cost of the indemnifying Party, assist in contesting the claim. This other Party (and its Personnel) shall not make any admission which might be prejudicial to the indemnifying Party, unless the indemnifying Party failed to take over the conduct of any negotiations, litigation or arbitration upon being requested to do so by such other Party.

17.6 Limitation of Liability

17.6.1 Neither Party shall be liable to the other Party for loss of use of any Works, loss of profit, loss of any contractor for any indirect or consequential loss or damage which may be suffered by the other Party in connection with the Contract, other than as specifically provided in Sub-Clause 8.7 [Delay Damages]; Sub-Clause 11.2 [Cost of Remedying Defects]; Sub-Clause 15.4 [Payment after Termination]; Sub-Clause 16.4 [Payment on Termination]; Sub-Clause17.1 [Indemnities]; Sub-Clause 17.4 (b) [Consequences of Procuring Entity's Risks] and Sub-Clause 17.5[Intellectual and Industrial Property Rights].

17.6.2 The total liability of the Contractor to the Procuring Entity, under or in connection with the Contract other than under Sub-Clause 4.19 [Electricity, Water and Gas], Sub-Clause 4.20 [Procuring Entity's Equipment and Free- Issue Materials], Sub-Clause 17.1 [Indemnities] and Sub-Clause 17.5 [Intellectual and Industrial Property Rights], shall not exceed the sum resulting from the application of a multiplier (less or greater than one) to the Accepted Contract Amount, as stated in the **SCC**, or (if such multiplier or other sum is not so stated) the Accepted Contract Amount.

17.6.3 This Sub-Clause shall not limit liability in any case of fraud, deliberate default or reckless misconduct by the defaulting Party.

17.7 Use of Procuring Entity's Accommodation/Facilities

17.7.1 The Contractor shall take full responsibility for the care of the Procuring Entity provided accommodation and facilities, if any, as detailed in the Specification, from the respective dates of hand-over to the Contract or until cessation of occupation (where hand-over or cessation of occupation may take place after the date stated in the Taking-Over Certificate for the Works).

17.7.2 If any loss or damage happens to any of the above items while the Contractor is responsible for their care arising from any cause whatsoever other than those for which the Procuring Entity is liable, the Contractor shall, at his own cost, rectify the loss or damage to the satisfaction of the Engineer.

18. INSURANCE

18.1 General Requirements for Insurances

18.1.1 In this Clause, “insuring Party” means, for each type of insurance, the Party responsible for effecting and maintaining the insurance specified in the relevant Sub-Clause.

18.1.2 Wherever the Contractor is the insuring Party, each insurance shall be affected with insurers and in terms approved by the Procuring Entity. These terms shall be consistent with any terms agreed by both Parties before the date of the Letter of Acceptance. This agreement of terms shall take precedence over the provisions of this Clause.

18.1.3 Wherever the Procuring Entity is the insuring Party, each insurance shall be affected with insurers and in terms acceptable to the Contractor. These terms shall be consistent with any terms agreed by both Parties before the date of the Letter of Acceptance. This agreement of terms shall take precedence over the provisions of this Clause.

18.1.4 If a policy is required to indemnify joint insured, the cover shall apply separately to each insured as though a separate policy had been issued for each of the joint insured. If a policy indemnifies additional joint insured, namely in addition to the insured specified in this Clause, (i) the Contractor shall act under the policy on behalf of these additional joint insured except that the Procuring Entity shall act for Procuring Entity's Personnel, (ii) additional joint insured shall not be entitled to receive payments directly from the insurer or to have any other direct dealings with the insurer, and (iii) the insuring Party shall require all additional joint insured to comply with the conditions stipulated in the policy.

18.1.5 Each policy insuring against loss or damage shall provide for payments to be made in the currencies required to rectify the loss or damage. Payments received from insurers shall be used for the rectification of the loss or damage.

18.1.6 The relevant insuring Party shall, within the respective periods stated in the **SCC** (calculated from the Commencement Date), submit to the other Party:

a) Evidence that the insurances described in this Clause have been affected, and

b) Copies of the policies for the insurances described in Sub-Clause 18.2 [Insurance for Works and Contractor's Equipment] and Sub-Clause 18.3 [Insurance against Injury to Persons and Damage to Property].

18.1.7 When each premium is paid, the insuring Party shall submit evidence of payment to the other Party. Whenever evidence or policies are submitted, the insuring Party shall also give notice to the Engineer.

18.1.8 Each Party shall comply with the conditions stipulated in each of the insurance policies. The insuring Party shall keep the insurers informed of any relevant changes to the execution of the Works and ensure that insurance is maintained in accordance with this Clause.

Neither Party shall make any material alteration to the terms of any insurance without the prior approval of the other Party. If an insurer makes (or attempts to make) any alteration, the Party first notified by the insurer

shall promptly give notice to the other Party.

18.1.9 The insuring Party fails to effect and keep in force any of the insurances it is required to effect and maintain under the Contract or fails to provide satisfactory evidence and copies of policies in accordance with this Sub- Clause, the other Party may (at its option and without prejudice to any other right or remedy) effect insurance for the relevant coverage and pay the premiums due. The insuring Party shall pay the amount of these premiums to the other Party, and the Contract Price shall be adjusted accordingly.

18.1.10 Nothing in this Clause limits the obligations, liabilities or responsibilities of the Contractor or the Procuring Entity, under the other terms of the Contractor otherwise. Any amounts not insured or not recovered from the insurers shall be borne by the Contractor and/or the Procuring Entity in accordance with these obligations, liabilities or responsibilities. However, if the insuring Party fails to effect and keep in force an insurance which is available and which it is required to effect and maintain under the Contract, and the other Party neither approves the omission nor effects insurance for the coverage relevant to this default, any moneys which should have been recoverable under this insurance shall be paid by the insuring Party.

18.1.11 Payments by one Party to the other Party shall be subject to Sub-Clause 2.5 [Procuring Entity's Claims] or Sub- Clause 20.1[Contractor's Claims], as applicable.

18.1.12 The Contractor shall be entitled to place all insurance relating to the Contract (including, but not limited to the insurance referred to Clause18) with insurers from any eligible source country.

18.2 Insurance for Works and Contractor's Equipment

18.2.1 The insuring Party shall insure the Works, Plant, Materials and Contractor's Documents for not less than the full reinstatement cost including the costs of demolition, removal of debris and professional fees and profit. This insurance shall be effective from the date by which the evidence is to be submitted under sub-paragraph (a) of Sub-Clause 18.1 [General Requirements for Insurances], until the date of issue of the Taking-Over Certificate for the Works.

18.2.2 The insuring Party shall maintain this insurance to provide cover until the date of issue of the Performance Certificate, for loss or damage for which the Contractor is liable arising from a cause occurring prior to the issue of the Taking-Over Certificate, and for loss or damage caused by the Contractor in the course of any other operations (including those under Clause 11 [Defects Liability]).

18.2.3 The insuring Party shall insure the Contractor's Equipment for not less than the full replacement value, including delivery to Site. For each item of Contractor's Equipment, the insurance shall be effective while it is being transported to the Site and until it is no longer required as Contractor's Equipment.

18.2.4 Unless otherwise stated in the Particular Conditions, insurances under this Sub-Clause:

a) Shall be affected and maintained by the Contractor as insuring Party,
b) shall be in the joint names of the Parties, who shall be jointly entitled to receive payments from the insurers, payments being held or allocated to the Party actually bearing the costs of rectifying the loss or damage,
c) shall cover all loss and damage from any cause not listed in Sub-Clause 17.3 [Procuring Entity's Risks],
d) shall also cover, to the extent specifically required in the tendering documents of the Contract, loss or damage to a part of the Works which is attributable to the use or occupation by the Procuring Entity of another part of the Works, and loss or damage from the risks listed in sub-paragraphs (c), (g) and (h) of Sub-Clause 17.3 [Procuring Entity's Risks], excluding (in each case) risks which are not insurable at commercially reasonable terms, with deductibles per occurrence of not more than the amount stated in the **SCC**(if an amount is not so stated, this sub-paragraph (d) shall not apply), and
e) may however exclude loss of, damage to, and reinstatement of:
    i) a part of the Works which is in a defective condition due to a defect in its design, materials or workmanship (but cover shall include any other parts which are lost or damaged as a direct result of this defective condition and not as described in sub-paragraph (ii) below),
    ii) a part of the Works which is lost or damaged in order to reinstate any other part of the Works if this other part is in a defective condition due to a defect in its design, materials or workmanship,
    iii) a part of the Works which has been taken over by the Procuring Entity, except to the extent that the Contractor is liable for the loss or damage, and
    iv) Goods while they are not in the Country, subject to Sub-Clause 14.5 [Plant and Materials intended for the Works].

18.2.5 If, more than one year after the Base Date, the cover described in sub-paragraph (d) above ceases to be available at commercially reasonable terms, the Contractor shall (as insuring Party) give notice to the Procuring Entity, with supporting particulars. The Procuring Entity shall then (i) be entitled subject to Sub-Clause 2.5 [Procuring Entity's Claims] to payment of an amount equivalent to such commercially reasonable terms as the Contractor should have expected to have paid for such cover, and (ii) be deemed, unless he obtains the cover at commercially reasonable terms, to have approved the omission under Sub-Clause 18.1 [General Requirements for Insurances].

18.3 Insurance against Injury to Persons and Damage to Property

18.3.1 The insuring Party shall insure against each Party's liability for any loss, damage, death or bodily injury which may occur to any physical property (except things insured under Sub-Clause 18.2 [Insurance for Works and Contractor's Equipment]) or to any person (except persons insured under Sub-Clause 18.4 [Insurance for Contractor's Personnel]), which may arise out of the Contractor's performance of the Contract and occurring before the issue of the Performance Certificate.

18.3.2 This insurance shall be for a limit per occurrence of not less than the amount stated in the **SCC**, with no limit on the number of occurrences. If an amount is not stated in the **SCC**, this Sub-Clause shall not apply. Unless otherwise stated in the Particular Conditions, the insurances specified in this Sub-Clause:

a) Shall be affected and maintained by the Contractor as insuring Party,
b) Shall be in the joint names of the Parties,
c) Shall be extended to cover liability for all loss and damage to the Procuring Entity's property (except things insured under Sub-Clause 18.2) arising out of the Contractor's performance of the Contract, and
d) May however exclude liability to the extent that it arises from:
   i) The Procuring Entity's right to have the Permanent Works executed on, over, under, in or through any land, and to occupy this land for the Permanent Works,
   ii) damage which is an unavoidable result of the Contractor's obligations to execute the Works and remedy any defects, and
   iii) a cause listed in Sub-Clause 17.3 [Procuring Entity's Risks], except to the extent that cover is available at commercially reasonable terms.

18.4 Insurance for Contractor's Personnel

18.4.1 The Contract or shall effect and maintain insurance against liability for claims, damages, losses and expenses (including legal fees and expenses) arising from injury, sickness, disease or death of any person employed by the Contractor or any other of the Contractor's Personnel.

18.4.2 The insurance shall cover the Procuring Entity and the Engineer against liability for claims, damages, losses and expenses (including legal fees and expenses) arising from injury, sickness, disease or death of any person employed by the Contractor or any other of the Contractor's Personnel, except that this insurance may exclude losses and claims to the extent that they arise from any act or neglect of the Procuring Entity or of the Procuring Entity's Personnel.

18.4.3 The insurance shall be maintained in full force and effect during the whole time that these personnel are assisting in the execution of the Works. For a Subcontractor's employees, the insurance may be effected by the Subcontractor, but the Contractor shall be responsible for compliance with this Clause.

19. FORCE MAJEURE

19.1 Definition of Force Majeure

19.1.1 In this Clause, “Force Majeure” means an exceptional event or circumstance:

a) Which is beyond a Party's control,
b) Which such Party could not reasonably have provided against before entering into the Contract,
c) Which, having arisen, such Party could not reasonably have avoided or overcome, and
d) Which is not substantially attributable to the other Party.

19.1.2 Force Majeure may include, but is not limited to, exceptional events or circumstances of the kind listed below, so long as conditions (a) to (d) above are satisfied:

i) war, hostilities (whether war be declared or not), invasion, act of foreign enemies,

ii) rebellion, terrorism, sabotage by persons other than the Contractor's Personnel, revolution, insurrection, military or usurped power, or civil war,

iii) riot, commotion, disorder, strike or lockout by persons other than the Contractor's Personnel,

iv) munitions of war, explosive materials, ionizing radiation or contamination by radio-activity, except as may be attributable to the Contractor's use of such munitions, explosives, radiation or radio-activity, and

v) natural catastrophes such as earthquake, hurricane, typhoon or volcanic activity.

19.2 Notice of Force Majeure

19.2.1 If a Party is or will be prevented from performing its substantial obligations under the Contract by Force Majeure, then it shall give notice to the other Party of the event or circumstances constituting the Force Majeure and shall specify the obligations, the performance of which is or will be prevented. The notice shall be given within 14 days after the Party became aware, or should have become aware, of the relevant event or circumstance constituting Force Majeure.

19.2.2 The Party shall, having given notice, be excused performance of its obligations for so long as such Force Majeure prevents it from performing them.

Notwithstanding any other provision of this Clause, Force Majeure shall not apply to obligations of either Party to make payments to the other Party under the Contract.

19.3 Duty to Minimize Delay

Each Party shall at all times use all reasonable endeavors to minimize any delay in the performance of the Contract as a result of Force Majeure. A Party shall give notice to the other Party when it ceases to be affected by the Force Majeure.

19.4 Consequences of Force Majeure

19.4.1 If the Contractor is prevented from performing his substantial obligations under the Contract by Force Majeure of which notice has been given under Sub-Clause 19.2 [Notice of Force Majeure], and suffers delay and/or incurs Cost by reason of such Force Majeure, the Contractor shall be entitled subject to Sub-Clause 20.1 [Contractor's Claims] to:

a) an extension of time for any such delay, if completion is or will be delayed, under Sub-Clause 8.4 [Extension of Time for Completion], and

b) if the event or circumstance is of the kind described in sub-paragraphs (i) to (iv) of Sub-Clause 19.1 [Definition of Force Majeure] and, in sub-paragraphs (ii) to (iv), occurs in the Country, payment of any such Cost, including the costs of rectifying or replacing the Works and/or Goods damaged or destroyed by Force Majeure, to the extent they are not indemnified through the insurance policy referred to in Sub-Clause 18.2 [Insurance for Works and Contractor's Equipment].

19.4.2 After receiving this notice, the Engineer shall proceed in accordance with Sub-Clause 3.5 [Determinations] to agree or determine these matters.

19.5 Force Majeure Affecting Subcontractor

If any Subcontractor is entitled under any contract or agreement relating to the Works to relief from force majeure on terms additional to or broader than those specified in this Clause, such additional or broader force majeure events or circumstances shall not excuse the Contractor's non-performance or entitle him to relief under this Clause.

19.6 Optional Termination, Payment and Release

If the execution of substantially all the Works in progress is prevented for a continuous period of 84 days by reason of Force Majeure of which notice has been given under Sub-Clause 19.2 [Notice of Force Majeure], or for multiple periods which total more than 140 days due to the same notified Force Majeure, then either Party may give to the other Party a notice of termination of the Contract. In this event, the termination shall take effect 7 days after the notice is given, and the Contractor shall proceed in accordance with Sub-Clause 16.3 [Cessation of Work and Removal of Contractor's Equipment].

Upon such termination, the Engineer shall determine the value of the work done and issue a Payment Certificate which shall include:

a) The amounts payable for any work carried out for which a price is stated in the Contract;
b) The Cost of Plant and Materials ordered for the Works which have been delivered to the Contractor, or of which the Contractor is liable to accept delivery: this Plant and Materials shall become the property of (and be at the risk of) the Procuring Entity when paid for by the Procuring Entity, and the Contractor shall place the same at the Procuring Entity's disposal;
c) other Cost or liabilities which in the circumstances were reasonably and necessarily incurred by the Contractor in the expectation of completing the Works;
d) the Cost of removal of Temporary Works and Contractor's Equipment from the Site and there turn of these items to the Contractor's works in his country (or to any other destination at no greater cost);and
e) the Cost of repatriation of the Contractor's staff and labor employed wholly in connection with the Works at the date of termination.

19.7 Release from Performance

Notwithstanding any other provision of this Clause, if any event or circumstance outside the control of the Parties (including, but not limited to, Force Majeure) arises which makes it impossible or unlawful for either or both Parties to fulfil its or their contractual obligations or which, under the law governing the Contract, entitles the Parties to be released from further performance of the Contract, then upon notice by either Party to the other Party of such event or circumstance:

a) The Parties shall be discharged from further performance, without prejudice to the rights of either Party in respect of any previous breach of the Contract, and
b) The sum payable by the Procuring Entity to the Contractor shall be the same as would have been payable under Sub-Clause 19.6 [Optional Termination, Payment and Release] if the Contract had been terminated under Sub-Clause 19.6.

20. CLAIMS, DISPUTES AND ARBITRATION

20.1 Contractor's Claims

20.1.1 If the Contractor considers itself to be entitled to any extension of the Time for Completion and/or any additional payment, under any Clause of these Conditions or otherwise in connection with the Contract, the Contractor shall give Notice to the Engineer, describing the event or circumstance giving rise to the claim. The notice shall be given as soon as practicable, and not later than 30 days after the Contractor became aware, or should have become aware, of the event or circumstance.

20.1.2 IftheContractorfailstogivenoticeofaclaimwithinsuchperiodof30days, the Time for Completion shall not be extended, the Contractor shall not be entitled to additional payment, and the Procuring Entity shall be discharged from all liability in connection with the claim. Otherwise, the following provisions of this Sub-Clause shall apply.

20.1.3 The Contractor shall also submit any other notices which are required by the Contract, and supporting particulars for the claim, all as relevant to such event or circumstance.

20.1.3 The Contractor shall keep such contemporary records as may be necessary to substantiate any claim, either on the Site or at another location acceptable to the Engineer. Without admitting the Procuring Entity's liability, the Engineer may, after receiving any notice under this Sub-Clause, monitor the record-keeping and/or instruct the Contractor to keep further contemporary records. The Contractor shall permit the Engineer to inspect all these records, and shall (if instructed) submit copies to the Engineer.

20.1.4 Within 42 days after the Contractor became aware (or should have become aware) of the event or circumstance giving rise to the claim, or within such other period as may be proposed by the Contractor and approved by the Engineer, the Contractor shall send to the Engineer a fully detailed claim which includes full supporting particulars of the basis of the claim and of the extension of time and/or additional payment claimed. If the event or circumstance giving rise to the claim has a continuing effect:

a) This fully detailed claim shall be considered as interim;
b) The Contractor shall send further interim claims at monthly intervals, giving the accumulated delay and/or amount claimed, and such further particulars as the Engineer may reasonably require; and
c) The Contractor shall send a final claim within 30 days after the end of the effects resulting from the

event or circumstance, or within such other period as may be proposed by the Contractor and approved by the Engineer.

20.1.5 Within 42 days after receiving a Notice of a claim or any further particulars supporting a previous claim, or within such other period as may be proposed by the Engineer and approved by the Contractor, the Engineer shall respond with approval, or with disapproval and detailed comments. He may also request any necessary further particulars, but shall nevertheless give his response on the principles of the claim within the above defined time period.

20.1.6 Within the above defined period of 42 days, the Engineer shall proceed in accordance with Sub-Clause 3.5 [Determinations] to agree or determine (i) the extension (if any) of the Time for Completion (before or after its expiry) in accordance with Sub-Clause 8.4 [Extension of Time for Completion], and/or (ii) the additional payment (if any) to which the Contractor is entitled under the Contract.

20.1.7 Each Payment Certificate shall include such additional payment for any claim as has been reasonably substantiated as due under the relevant provision of the Contract. Unless and until the particulars supplied are sufficient to substantiate the whole of the claim, the Contractor shall only be entitled to payment for such part of the claim as he has been able to substantiate.

20.1.8 If the Engineer does not respond within the time frame defined in this Clause, either Party may consider that the claim is rejected by the Engineer and any of the Parties may refer to Arbitration in accordance with Sub-Clause 20.4 [Arbitration].

20.1.9 The requirements of this Sub-Clause are in addition to those of any other Sub-Clause which may apply toa claim. If the Contractor fails to comply with this or another Sub-Clause in relation to any claim, any extension of time and/or additional payment shall take account of the extent (if any) to which the failure has prevented or prejudiced proper investigation of the claim, unless the claim is excluded under the second paragraph of Sub- Clause 20.3 (f).

20.2 Amicable Settlement

Where a notice of a claim has been given, both Parties shall attempt to settle the dispute amicably before the commencement of arbitration. However, unless both Parties agree otherwise, the Party giving a notice of a claim in accordance with Sub-Clause 20.1 above should move to commence arbitration after the fifty-sixth day from the day on which a notice of a claim was given, even if no attempt at an amicable settlement has been made.

20.3 Matters that may be referred to arbitration

Notwithstanding anything stated herein the following matters may be referred to arbitration before the practical completion of the Works or abandonment of the Works or termination of the Contract by either party:

a) The appointment of a replacement Engineer upon the said person ceasing to act.
b) Whether or not the issue of an instruction by the Engineer is empowered by these Conditions.
c) Whether or not a certificate has been improperly withheld or is not in accordance with these Conditions.
e) Any dispute arising in respect of war risks or war damage.
f) All other matters shall only be referred to arbitration after the completion or alleged completion of the Works or termination or alleged termination of the Contract, unless the Procuring Entity and the Contract or agree otherwise in writing.

20.4 Arbitration

20.4.1 Any claim or dispute between the Parties arising out of or in connection with the Contract not settled amicably in accordance with Sub-Clause 20.3 shall be finally settled by arbitration.

20.4.2 No arbitration proceedings shall be commenced on any claim or dispute where notice of a claim or dispute has not been given by the applying party within ninety days of the occurrence or discovery of the matter or issue giving rise to the dispute.

20.4.3 Notwithstanding the issue of a notice as stated above, the arbitration of such a claim or dispute shall not commence unless an attempt has in the first instance been made by the parties to settle such claim or dispute amicably with or without the assistance of third parties. Proof of such attempt shall be required.

20.4.4 The Arbitrator shall, without prejudice to the generality of his powers, have powers to direct such measurements, computations, tests or valuations as may in his opinion be desirable in order to determine the rights of the parties and assess and award any sums which ought to have been the subject of or included in any certificate.

20.4.5 The Arbitrator shall, without prejudice to the generality of his powers, have powers to open up, review and revise any certificate, opinion, decision, requirement or notice and to determine all matters in dispute which shall be submitted to him in the same manner as if no such certificate, opinion, decision requirement or notice had been given.

20.4.6 The arbitrators shall have full power to open up, review and revise any certificate, determination, instruction, opinion or valuation of the Engineer, relevant to the dispute. Nothing shall disqualify representatives of the Parties and the Engineer from being called as a witness and giving evidence before the arbitrators on any matter whatsoever relevant to the dispute.

20.4.7 Neither Party shall be limited in the proceedings before the arbitrators to the evidence, or to the reasons for dissatisfaction given in its Notice of Dissatisfaction.

20.4.7 Arbitration may be commenced prior to or after completion of the Works. The obligations of the Parties, and the Engineer shall not be altered by reason of any arbitration being conducted during the progress of the Works.

20.4.8 The terms of the remuneration of each or all the members of Arbitration shall be mutually agreed upon by the Parties when agreeing the terms of appointment. Each Party shall be responsible for paying one-half of this remuneration.

20.5 Arbitration with National Contractors

20.5.1 If the Contract is with national contractors, arbitration proceedings will be conducted in accordance with the Arbitration Laws of Kenya. In case of any claim or dispute, such claim or dispute shall be notified in writing by either party to the other with a request to submit it to arbitration and to concur in the appointment of an Arbitrator within thirty days of the notice. The dispute shall be referred to the arbitration and final decision of a person to be agreed between the parties. Failing agreement to concur in the appointment of an Arbitrator, the Arbitrator shall be appointed, on the request of the applying party, by the Chairman or Vice Chairman of any of the following professional institutions;

i) Architectural Association of Kenya
ii) Institute of Quantity Surveyors of Kenya
iii) Association of Consulting Engineers of Kenya
iv) Chartered Institute of Arbitrators (Kenya Branch)
v) Institution of Engineers of Kenya

20.5.2 The institution written to first by the aggrieved party shall take precedence over all other institutions.

20.6 Arbitration with Foreign Contractors

20.7.1 Arbitration with foreign contractors shall be conducted in accordance with the arbitration rules of the United Nations Commission on International Trade Law (UNCITRAL); or with proceedings administered by the International Chamber of Commerce (ICC) and conducted under the ICC Rules of Arbitration; by one or more arbitrators appointed in accordance with said arbitration rules.

20.7.2 The place of arbitration shall be a location specified in the **SCC;** and the arbitration shall be conducted in the language for communications defined in Sub-Clause 1.4 [Law and Language].

20.7 Alternative Arbitration Proceedings

Alternatively, the Parties may refer the matter to the Nairobi Centre for International Arbitration (NCIA) which offers a neutral venue for the conduct of national and international arbitration with commitment to providing institutional support to the arbitral process.

20.8 Failure to Comply with Arbitrator's Decision

20.8.1 The award of such Arbitrator shall be final and binding upon the parties.

10.8.2 In the event that a Party fails to comply with a final and binding Arbitrator's decision, then the other Party may, without prejudice to any other rights it may have, refer the matter to a competent court of law.

10.7 Contract operations continue

Notwithstanding any reference to arbitration herein,

a) The parties shall continue to perform their respective obligations under the Contract unless they otherwise agree; and

b) The Procuring Entity shall pay the Contractor any monies due the Contractor.

SECTION IX – SPECIAL CONDITIONS OF CONTRACT

The following Particular Conditions shall supplement the GCC. Whenever there is a conflict, the provisions herein shall prevail over those in the GCC.

Conditions	**GCC Clause**	**Data**
Procuring Entity's name and address	1	County Government of Kitui P.O. Box 33-90200 Kitui
Time for Completion	1	**<u>3 months</u>** *If Sections are to be used, refer to Table: Summary of Sections below: -*
Engineer's name and address	1	Chief Officers Roads and Public Works P.O. Box 33-90200 Kitui
Electronic transmission	1.3	If so, allowed the systems of electronic transmission shall be **N/A**
Time for the Parties entering into a Contract Agreement	1.6	Within 30 days after award
Time for access to the Site	2.1	As prescribed in the Commencement Letter
Engineer's Authority to make variations.	3.1.2 (b) (ii)	Variation would increase the Accepted Contract Amount by not exceeding 0% of the contract Price. No variations in cost allowed
		Variations resulting in an increase of the Accepted Contract Amount in excess of_0___% shall require approval of the Procuring Entity.
Performance Security	4.2.2	The Performance Security shall be in the amount of **10% of Contract Amount** and denominated in the currency kenya shillings
		The performance security will be in the form of a *"demand bank guarantee"* in the amount(s) **10%** (percent) of the Accepted Contract Amount in the same currency(ies) of the Contract Amount.
Contractor's Representative's name	4.3	*[insert the name of the Contractor's Representative agreed by the Procuring Entity prior to Contract signature]*
Working Hours	6.5	Normal working hours shall be_8hrs_____.
Key Personnel names	6.9.1	*GCC 9.1 is replaced with the following:* *9.1 Key Personnel are the Contractor's personnel named in this GCC 9.1 of the Special* *Conditions of Contract. The Contractor shall employ the Key Personnel and use the* *equipment identified in its Bid, to carry out the Works or other personnel and equipment*

Conditions	GCC Clause	Data
		approved by the Project Manager. The Project Manager shall approve any proposed *replacement of Key Personnel and equipment only if their relevant qualifications or* *characteristics are substantially equal to or better than those proposed in the Bid.* *[insert the name/s of each Key Personnel agreed by the Procuring Entity prior to* *Contract signature.]*
Commencement of Works	8.1.1(c)	*As prescribed in commencement letter*
Delay Damages	8.7.1	Delay damages shall be **Kshs. 20,000.00** per day of delay.
Maximum amount of delay damages	8.7.1	**10%** of the final Contract Price.
Defects Notification Period		**3 months**
Adjustments for Changes in Cost	13.8.3	Period "n" applicable to the adjustment multiplier "Pn": **N/A** *[Insert the period if different from one (1) month; if period "n" is one (1) month, insert "not applicable"]*
Delay damages for the Works	8.7 & 14.15(b)	_____1 % of the Contract Price per day. *If Sections are to be used, refer to Table: Summary of Sections below*
Provisional Sums	13.5. (b)(iii)	*[If there are Provisional Sums, insert a percentage for adjustment of Provisional Sums]* _____%, otherwise insert "NONE". none
Total advance payment	14.2.1	**NO ADVANCE PAYMENT**
Repayment amortization rate of advance payment	14.2.4(b)	_____% NA
Limit of Retention	14.3.2(c)	The limit of Retention Money (if any) shall be ___**5%**_____ _____
Percentage of Retention	14.3.2(c)	**-------5-------% ____**

Conditions	GCC Clause	Data
Plant and Materials	14.5.2(b)(i)	If Sub-Clause 14.5 applies: Plant and Materials for payment Free on Board _____ *[list]*.
	14.5.2(c)(i)	Plant and Materials for payment when delivered to the Site _____ *[list]*.
Minimum Amount of Interim Payment Certificates	14.6.1	_____**25**_____ % of the Accepted Contract Amount.
Publishing source of commercial interest rates for financial charges in case of delayed payment	14.8	Three percentage points above the discount rate given by the Central bank of Kenya.
Maximum total liability of the Contractor to the Procuring Entity	17.6.2	*[Select one of the two options below as appropriate]* The product of_____ *[insert a multiplier less or greater than one]* times the Accepted Contract Amount, *or* _____ *[insert amount of the maximum total liability]*
Periods for submission of insurance:	18.1.6	*30days*
a. evidence of insurance.		_____days
b. relevant policies		_____days
Maximum number of deductibles for insurance of the Procuring Entity's risks	18.2(d)	*The minimum insurance amounts and deductibles shall be:* *(a) for loss or damage to the Works, Plant and Materials: [contract value].* *(b) For loss or damage to Equipment: [Value Of Equipment On Site].* *(c) for loss or damage to property (except the Works, Plant, Materials, and Equipment) in* *connection with Contract [provide insurance cover].* *(d) for personal injury or death:* *(i) of the Contractor's employees: [not less than khs, 1,000,000.00].* *(ii) of other people: [not less than khs, 1,000,000.00].*
Minimum amount of third-party insurance	18.3.2	*[Insert amount of third-party insurance]*

Conditions	GCC Clause	Data
The place of arbitration	20.7.2	The place of arbitration shall be Chartered Institute of Arbitrator, Kenya_____

Section X - Contract Forms

Table of Forms

FORM No. 1 - NOTIFICATION OF INTENTION TO AWARD

FORM NO. 2 – REQUEST FOR REVIEW

FORM No. 3-LETTER OF AWARD

FORM No. 4 - CONTRACT AGREEMENT

FORM No. 5 - PERFORMANCE SECURITY [Option 1 - Unconditional Demand Bank Guarantee]

FORM No. 6- PERFORMANCE SECURITY [Option 2– Performance Bond]

FORM No. 7 - ADVANCE PAYMENT SECURITY

FORM No. 8 - RETENTION MONEY SECURITY

FORM NO. 9 BENEFICIAL OWNERSHIP DISCLOSURE FORM

FORM No. I - Notification of Intention to Award

[*This Notification of Intention to Award shall be sent to each Tenderer that submitted a Tender.*] [*Send this Notification to the Tenderer's Authorized Representative named in the Tender Information Form*]

FORMAT

For the attention of Tenderer's Authorized Representative

Name:……..*[insert Authorized Representative's name]* Address: *[insert Authorized Representative's Address]* Telephones: *[insert Authorized Representative's telephone/fax numbers]* Email Address: *[insert Authorized Representative's email address]*

*[**IMPORTANT:** insert the date that this Notification is transmitted to Tenderers. The Notification must be sent to all Tenderers simultaneously. This means on the same date and as close to the same time as possible.]*

Date of Transmission: This Notification is sent by: [*email*] on [*date*] (local time)

ProcuringEntity: *[insert the name of the Procuring Entity]* Contracttitle: *[insert the name of the contract]*

Country: Kenya, County_____(*if the Procuring Entity is from a County*)

This Notification of Intention to Award (Notification) notifies you of our decision to award the above contract. The transmission of this Notification begins the Standstill Period. During the Standstill Period, you may:

a) Request a debriefing in relation the evaluation of your Tender, and/or

b) Submit a Procurement-related Complaint in relation to the decision to award the contract.

1. **The successful Tenderer**

Name: [*insert name of successful Tenderer*]. Address: [*insert address of the successful Tenderer*] Contract price: [*insert contract price of the successful Tender*]

2. **Other Tenderers**: *insert names of all Tenderers that submitted a Tender. If the Tender's price was evaluated include the evaluated price as well as the Tender price as read out.]*

	Name of Tenderer	**Tender price**	**Evaluated Tender price**	*Comments (if any)*
1				
2				
3				
4				
5				
6				
7				
Etc.				

1. How to request a debriefing

DEADLINE: The deadline to request a debriefing expires at midnight on [*insert date*] (local time).

You may request a debriefing in relation to the results of the evaluation of your Tender. If you decide to request a debriefing your written request must be made within three (3) Business Days of receipt of this Notification of Intention to Award. Provide the contract name, reference number, name of the Tenderer, contact details; and address the request for debriefing as follows:

Attention: [*insert full name of person, if applicable*] **Title/position**: *[insert title/position*] **Procuring Entity**:

[*insert name of Procuring Entity*] **Email address**: [*insert email address*]

If your request for a debriefing is received within the 3 Business Days deadline, we will provide the debriefing within five (5) Business Days of receipt of your request. If we are unable to provide the debriefing within this period, the Standstill Period shall be extended by five (5) Business Days after the date that the debriefing is provided. If this happens, we will notify you and confirm the date that the extended Standstill Period will end. The debriefing may be in writing, by phone, video conference call or in person. We shall promptly advise you in writing how the debriefing will take place and confirm the date and time.

If the deadline to request a debriefing has expired, you may still request a debriefing. In this case, we will provide the debriefing as soon as practicable, and normally no later than fifteen (15) Business Days from the date of publication of the Contract Award Notice.

2. How to make a complaint

Period: Procurement-related Complaint challenging the decision to award shall be submitted by midnight, [*insert date*] (local time).

Provide the contract name, reference number, name of the Tenderer, contact details; and address the Procurement-related Complaint as follows:

Attention: [*insert full name of person, if applicable*]

Title/position: [*insert title/position*] Procuring

Entity: [*insert name of Procuring Entity*] Email

address: [*insert email address*]

At this point in the procurement process, you may submit a Procurement-related Complaint challenging the decision to award the contract. You do not need to have requested, or received, a debriefing before making this complaint. Your complaint must be submitted within the Standstill Period and received by us before the Standstill Period ends.

In summary, there are four essential requirements:

a) You must be an 'interested party'. In this case, that means a Tenderer who submitted a Tender in this tendering process, and is the recipient of a Notification of Intention to Award.

b) The complaint can only challenge the decision to award the contract.

c) You must submit the complaint within the period stated above.

d) You must include, in your complaint, all of the information necessary to support your case.

e) The application must be accompanied by the fees set out in the Procurement Regulations, which shall not be refundable (information available from the Public Procurement Authority at www.ppoa.go.ke.

3. Standstill Period

a) **DEADLINE:** The Standstill Period is due to end at midnight on [*insert date*] (local time).

i) The Standstill Period lasts ten (14) Days after the date of transmission of this Notification of Intention to Award.

(ii) The Standstill Period may be extended as stated in Section 4 above.

If you have any questions regarding this Notification please do not hesitate to contact

us. On behalf of the Procuring Entity:

Name_____

Title and Position_____

_____

Signature_____

Date_____

FORM NO. 2 - REQUEST FOR REVIEW

FORM FOR REVIEW (r.203 (1))

PUBLIC PROCUREMENT ADMINISTRATIVE REVIEW BOARD

APPLICATION NO…….OF…….….20……...

BETWEEN

……...…….APPLICANT

AND

……RESPONDENT (Procuring Entity)

Request for review of the decision of the…… (Name of the Procuring Entity of ……dated the…day of …….20…….in the matter of Tender No……..…of ……..20….. for ..... (Tender description).

REQUEST FOR REVIEW

I/We……, the above-named Applicant(s), of address: Physical address……. P. O. Box No……. Tel. No……. Email ……, hereby request the Public Procurement Administrative Review Board to review the whole/part of the above-mentioned decision on the following grounds, namely:

1.

2.

By this memorandum, the Applicant requests the Board for an order/order that:

1.

2.

SIGNED ……. (Applicant) Dated on……. day of ……/…20……

FOR OFFICIAL USE ONLY Lodged with the Secretary Public Procurement Administrative Review Board on……day of ……....20….……

SIGNED

Board Secretary

FORM NO. 3 - LETTER OF AWARD

[Letter head paper of the Procuring Entity]

[Date]

FORMAT

To: *[name and address of the Contractor]*

This is to notify you that your Tender dated *[date]* for execution of the *[name of the Contract and identification number, as given in the **SCC**]* for the Accepted Contract Amount *[amount in numbers and words] [name of currency]*, as corrected and modified in accordance with the Instructions to Tenderers, is hereby accepted by our Agency.

You are requested to furnish the Performance Security within 30 days in accordance with the Conditions of Contract, using, for that purpose, one of the Performance Security Forms included in Section X, Contract Forms, of the tender document.

We attach a copy of the Contact for your

Authorized Signature:

Name and Title of

Signatory: Name of

Agency:

Attachment: Contract Agreement

FORM NO. 4 – CONTRACT AGREEMENT

THIS AGREEMENT made the _____ day of _____, _____, between _____of _____ (hereinafter "the Procuring Entity"), of the one part, and_____of_____(herein after "the Contractor"), of the other part:

WHEREAS the Procuring Entity desires that the Works known as_____should be executed by the Contractor, and has accepted a Tender by the Contractor for the execution and completion of these Works and the remedying of any defects therein, The Procuring Entity and the Contractor agree as follows:

1. In this Agreement words and expressions shall have the same meanings as are respectively assigned to them in the Contract documents referred to.

2. The following documents shall be deemed to form and be read and construed as part of this Agreement. This Agreement shall prevail over all other Contract documents.

   a) The Letter of Acceptance
   b) The Letter of Tender
   c) The addenda Nos_____(if any)
   d) The Particular Conditions
   e) The General Conditions;
   f) The Specification
   g) The Drawings; and
   h) The completed Schedules and any other documents forming part of the contract.

3. In consideration of the payments to be made by the Procuring Entity to the Contractor as specified in this Agreement, the Contractor hereby covenants with the Procuring Entity to execute the Works and to remedy defects therein in conformity in all respects with the provisions of the Contract.

4. The Procuring Entity hereby covenants to pay the Contractor in consideration of the execution and completion of the Works and the remedying of defects therein, the Contract Price or such other sum as may become payable under the provisions of the Contract at the times and in the manner prescribed by the Contract.

   IN WITNESS whereof the parties hereto have caused this Agreement to be executed in accordance with the laws of Kenya on the day, month and year specified above.

Signed by_____

_____(For the Procuring Entity)

Signed by_____

_____(For the Contractor)

FORM NO. 5 - PERFORMANCE SECURITY
– (Unconditional Demand Bank Guarantee)

[Guarantor letterhead or SWIFT identifier code]

Beneficiary:_____*[insert name and Address of* Procuring

Entity*]* **Date:**_____*[Insert date of issue]*

PERFORMANCE GUARANTEE No.:_____

Guarantor: *[Insert name and address of place of issue, unless indicated in the letterhead]*

1. We have been informed that_____(herein after called "the Applicant") has entered into Contract No._____*dated*_____with the Beneficiary, for the execution of _____ (herein after called "the Contract").

2. Furthermore, we understand that, according to the conditions of the Contract, a performance guarantee is required.

3. At the request of the Applicant, we as Guarantor, here by irrevocably undertake to pay the Beneficiary any sum or sums not exceeding in total an amount of_____( ),[1] such sum being payable in the types and proportions of currencies in which the Contract Price is payable, upon receipt by us of the Beneficiary's complying demand supported by the Beneficiary's statement, whether in the demand itself or in a separate signed document accompanying or identifying the demand, stating that the Applicant is in breach of its obligation(s) under the Contract, without the Beneficiary needing to prove or to show grounds for your demand or the sum specified therein.

4. This guarantee shall expire, no later than the …..... Day of …..... 2…[2], and any demand for payment under it must be received by us at this office indicated above on or before that date.

5. The Guarantor agrees to a one-time extension of this guarantee for a period not to exceed *[six months] [one year]*, in response to the Beneficiary's written request for such extension, such request to be presented to the Guarantor before the expiry of the guarantee."

_____

_____

[Name of Authorized Official, signature(s) and seals/stamps]

Note: All italicized text (including footnotes) is for use in preparing this form and shall be deleted from the final product.

[1] *The Guarantor shall insert an amount representing the percentage of the Accepted Contract Amount specified in the Letter of Acceptance, less provisional sums, if any, and denominated either in the currency (cies) of the Contract or a freely convertible currency acceptable to the Beneficiary.*

[2] *Insert the date twenty-eight days after the expected completion date as described in GC Clause 11.9. The Procuring Entity should note that in the event of an extension of this date for completion of the Contract, the Procuring Entity would need to request an extension of this guarantee from the Guarantor. Such request must be in writing and must be made prior to the expiration date established in the guarantee. In preparing this guarantee, the Procuring Entity might consider adding the following text to the form, at the end of the pen ultimate paragraph: "The Guarantor agrees to a one-time extension of this guarantee for a period not to exceed [six months] [one year], in response to the Beneficiary's written request for such extension, such request to be presented to the Guarantor before the expiry of the guarantee."*

FORM No. 6 - PERFORMANCE SECURITY OPTION 2– (Performance Bond)

*[**Note:** Procuring Entities are advised to use Performance Security–Unconditional Demand Bank Guarantee instead of Performance Bond due to difficulties involved in calling Bond holder to action]*

[Guarantor letterhead or SWIFT identifier code]

Beneficiary:_____*[insert name and Address of* Procuring

Entity*]* **Date:**_____*[Insert date of issue]* **PERFORMANCE**

BOND No.:_____

Guarantor: [*Insert name and address of place of issue, unless indicated in the letter head]*

1. By this Bond_____as Principal (hereinafter called "the Contractor") and_____] as Surety (hereinafter called "the Surety"), are held and firmly bound unto_____] as Obligee (hereinafter called "the Procuring Entity") in the amount of_____for the payment of which sum well and truly to be made in the types and proportions of currencies in which the Contract Price is payable, the Contractor and the Surety bind themselves, their heirs, executors, administrators, successors and assigns, jointly and everally, firmly by these presents.

2 WHEREAS the Contractor has entered into a written Agreement with the Procuring Entity dated the day of, 20_____, for_____in accordance with the documents, plans, specifications, and amendments thereto, which to the extent here in provided for, are by reference made part hereof and are herein after referred to as the Contract.

3 NOW, THEREFORE, the Condition of this Obligation is such that, if the Contractor shall promptly and faithfully perform the said Contract (including any amendments thereto), then this obligation shall be null and void; otherwise, it shall remain in full force and effect. Whenever the Contractor shall be, and declared by the Procuring Entity to be, in default under the Contract, the Procuring Entity having performed the Procuring Entity's obligations there under, the Surety may promptly remedy the default, or shall promptly:

1) Complete the Contract in accordance with its terms and conditions; or

2) Obtain a tender or tenders from qualified tenderers for submission to the Procuring Entity for completing the Contract in accordance with its terms and conditions, and upon determination by the Procuring Entity and the Surety of the lowest responsive Tenderers, arrange for a Contract between such Tenderer, and Procuring Entity and make available as work progresses (even though there should be a default or a succession of defaults under the Contract or Contracts of completion arranged under this paragraph) sufficient funds to pay the cost of completion less the Balance of the Contract Price; but not exceeding, including other costs and damages for which the Surety may be liable hereunder, the amount set forth in the first paragraph hereof. The term "Balance of the Contract Price," as used in this paragraph, shall mean the total amount payable by Procuring Entity to Contractor under the Contract, less the amount properly paid by Procuring Entity to Contractor; or

3) Pay the Procuring Entity the amount required by Procuring Entity to complete the Contract in accordance with its terms and conditions up to a total not exceeding the amount of this Bond.

4 The Surety shall not be liable for a greater sum than the specified penalty of this Bond.

5 Any suit under this Bond must be instituted before the expiration of one year from the date of the issuing of the Taking-Over Certificate. No right of action shall accrue on this Bond to or for the use of any person or corporation other than the Procuring Entity named here in or the heirs, executors, administrators, successors, and assigns of the Procuring Entity.

6 In testimony where off, the Contractor has here unto set his hand and affixed his seal, and the Surety has caused these presents to be sealed with his corporate seal duly attested by the signature of his legal representative, this day
_____of_____20_____.

SIGNED ON_____on behalf of_____

by_____in the capacity of_____

in the presence of

SIGNED ON_____on behalf of_____

by_____in the capacity of_____

in the presence of

FORM NO. 7 - ADVANCE PAYMENT SECURITY

[Demand Bank Guarantee] *[Guarantor letterhead or SWIFT identifier*

code] [Guarantor letterhead o swift identifier code]
Beneficiary:_____*[Insert name and Address of* Procuring Entity*]* **Date:**_____*[Insert date of issue]*

ADVANCE PAYMENT GUARANTEE No.: *[Insert guarantee reference number]*

Guarantor: [*Insert name and address of place of issue, unless indicated in the letterhead]*

1. We have been informed that_____(herein after called "the Applicant") has entered into Contract No._____*dated*_____with the Beneficiary, for the execution of _____ (herein after called" the Contract").

2. Furthermore, we understand that, according to the conditions of the Contract, an advance payment in the sum _____( ) is to be made against an advance payment guarantee.

3. At the request of the Applicant, we as Guarantor, hereby irrevocably undertake to pay the Beneficiary any sum or sums not exceeding in total an amount of_____( )[1] upon receipt by us of the Beneficiary's complying demand supported by the Beneficiary's statement, whether in the demand itself or in a separate signed document accompanying or identifying the demand, stating either that the Applicant:
   a) Has used the advance payment for purposes other than the costs of mobilization in respect of the works; or
   b) Has failed to repay the advance payment in accordance with the Contract conditions, specifying the amount which the Applicant has failed to repay.

4. A demand under this guarantee may be presented as from the presentation to the Guarantor of a certificate from the Beneficiary's bank stating that the advance payment referred to above has been credited to the Applicant on its account number_____at_____

5. The maximum amount of this guarantee shall be progressively reduced by the amount of the advance payment repaid by the Applicant as specified in copies of interim statements or payment certificates which shall be presented to us. This guarantee shall expire, at the latest, upon our receipt of a copy of the interim payment certificate indicating that ninety (90) percent of the Accepted Contract Amount, less provisional sums, has been certified for payment, or on the_____day of_____,2_____,[2] whichever is earlier. Consequently, any demand for payment under this guarantee must be received by us at this office on or before that date.

6. The Guarantor agrees to a one-time extension of this guarantee for a period not to exceed *[six months] [one year]*, in response to the Beneficiary's written request for such extension, such request to be presented to the Guarantor before the expiry of the guarantee.

   [Name of Authorized Official, signature(s) and seals/stamps]

Note: All italicized text (including footnotes) is for use in preparing this form and shall be deleted from the final product.

[1] *The Guarantor shall insert an amount representing the amount of the advance payment and denominated either in the currency (ies) of the advance payment as specified in the Contract, or in a freely convertible currency acceptable to the Procuring Entity.*

[2] *Insert the expected expiration date of the Time for Completion. The Procuring Entity should note that in the event of an extension of the time for completion of the Contract, the Procuring Entity would need to request an extension of this guarantee from the Guarantor. Such request must be in writing and must be made prior to the expiration date established in the guarantee. In preparing this guarantee, the Procuring Entity might consider adding the following text to the form, at the end of the penultimate paragraph: "The Guarantor agrees to a one-time extension of this guarantee for a period not to exceed [six months] [one year], in response to the Beneficiary's written request for such extension, such request to be presented to the Guarantor before the expiry of the guarantee."*

FORM NO. 8 - RETENTION MONEY SECURITY
[Demand Bank Guarantee]

[Guarantor letterhead]

Beneficiary: _____*[Insert name and Address of* Procuring Entity*]* **Date:** _____*[Insert date of issue]*

ADVANCE PAYMENT GUARANTEE No.:_____
[Insert guarantee reference number]

Guarantor: *[Insert name and address of place of issue, unless indicated in the letterhead]*

1. We have been informed that_____*[insert name of Contractor, which in the case of a joint venture shall be the name of the joint venture]* (herein after recalled" the Contractor") has entered into Contract No. _____*[Insert reference number of the contract]* dated_____with the Beneficiary, for the execution of_____*[insert name of contract and brief description of* Works*]* (herein after called" the Contract").

2. Furthermore, we understand that, according to the conditions of the Contract, the Beneficiary retains moneys up to the limit set forth in the Contract ("the Retention Money"), and that when the Taking-Over Certificate has been issued under the Contract and the first half of the Retention Money has been certified for payment, and payment of *[*insert the second half of the Retention Money] is to be made against a Retention Money guarantee.

3. At the request of the Contractor, we, as Guarantor, hereby irrevocably undertake to pay the Beneficiary any sum or sums not exceeding in total an amount of *[insert amount in figures]*_____(*[insert amount in words*_____*])*[1] upon receipt by us of the Beneficiary's complying demand supported by the Beneficiary's statement, whether in the demand itself or in a separate signed document accompanying or identifying the demand, stating that the Contractor is in breach of its obligation(s) under the Contract, without your needing to prove or show grounds for your demand or the sum specified therein.

4. A demand under this guarantee may be presented as from the presentation to the Guarantor of a certificate from the Beneficiary's bank stating that the second half of the Retention Money as referred to above has been credited to the Contractor on its account number_____at_____*[insert name and address of Applicant's bank]*.

5. This guarantee shall expire no later than the…… Day of……..…, 2…[2], and any demand for payment under it must be received by us at the office indicated above on or before that date.

6. The Guarantor agrees to a one-time extension of this guarantee for a period not to exceed *[six months] [one year],* in response to the Beneficiary's written request for such extension, such request to be presented to the Guarantor before the expiry of the guarantee.

_____
[Name of Authorized Official, signature(s) and seals/stamps]

Note: All italicized text (including foot notes) is for use in preparing this form and shall be deleted from the final product.

---

[1] *The Guarantor shall insert an amount representing the amount of the second half of the Retention Money.*

[2] *Insert a date that is twenty-eigh tdays after the expiry of retention period after the actual completion date of the contract. The Procuring Entity should note that in the event of an extension of this date for completion of the Contract, the Procuring Entity would need to request an extension of this guarantee from the Guarantor. Such request must be in writing and must be made prior to the expiration date established in the guarantee.*

FORM NO. 9 BENEFICIAL OWNERSHIP DISCLOSURE FORM

(Amended and issued pursuant to PPRA CIRCULAR No. 02/2022)

INSTRUCTIONS TO TENDERERS: DELETE THIS BOX ONCE YOU HAVE COMPLETED THE FORM

This Beneficial Ownership Disclosure Form ("Form") is to be completed by the successful tenderer pursuant to Regulation 13 (2A) and 13 (6) of the Companies (Beneficial Ownership Information) Regulations, 2020. In case of joint venture, the tenderer must submit a separate Form for each member. The beneficial ownership information to be submitted in this Form shall be current as of the date of its submission.

For the purposes of this Form, a Beneficial Owner of a Tenderer is any natural person who ultimately owns or controls the legal person (tenderer) or arrangements or a natural person on whose behalf a transaction is conducted, and includes those persons who exercise ultimate effective control over a legal person (Tenderer) or arrangement.

Tender Reference No.:_____[*insert identification no*] Name of the Tender Title/Description:_____*[insert name of the assignment]* to:_____*[insert complete name of Procuring Entity]*

In response to the requirement in your notification of award dated__*[insert date of notification of award]* to furnish additional information on beneficial ownership:_____*[select one option as applicable and delete the options that are not applicable]*

I) We here by provide the following beneficial ownership information.

Details of beneficial ownership

	Details of all Beneficial Owners		**% of shares a person holds in the company Directly or indirectly**	**% of voting rights, a person holds in the company**	**Whether a person directly or indirectly holds a right to appoint or remove a member of the board of directors of the company or an equivalent governing body of the Tenderer** (Yes / No)	**Whether a person directly or indirectly exercises significant influence or control over the Company (tenderer) (Yes / No)**
1.	Full Name		Directly---------- % of shares Indirectly---------- % of shares	Directly…… ……. % of voting rights Indirectly---------- % of voting rights	1. Having the right to appoint a majority of the board of the directors or an equivalent governing body of the Tenderer: Yes -----No---- 2. Is this right held directly or indirectly? Direct…… …… Indirect…… ……..	1. Exercises significant influence or control over the Company body of the Company (tenderer) Yes -----No---- 2. Is this influence or control exercised directly or indirectly?
	National identity card number or Passport number					
	Personal Identification Number (where applicable)					
	Nationality					
	Date of birth *[dd/mm/yyyy]*					
	Postal address					
	Residential address					
	Telephone number					
	Email address					

	Details of all Beneficial Owners		**% of shares a person holds in the company Directly or indirectly**	**% of voting rights, a person holds in the company**	**Whether a person directly or indirectly holds a right to appoint or remove a member of the board of directors of the company or an equivalent governing body of the Tenderer** (Yes / No)	**Whether a person directly or indirectly exercises significant influence or control over the Company (tenderer) (Yes / No)**
	Occupation or profession					Direct…… …. Indirect…… …
2.	Full Name		Directly------ ----- % of shares Indirectly---- ------ % of shares	Directly…… ……. % of voting rights Indirectly---------- % of voting rights	1. Having the right to appoint a majority of the board of the directors or an equivalent governing body of the Tenderer: Yes -----No---- 2. Is this right held directly or indirectly? Direct…… …… Indirect…… ……...	1. Exercises significant influence or control over the Company body of the Company (tenderer**)** Yes -----No-- -- 2. Is this influence or control exercised directly or indirectly? Direct…… …. Indirect…… …
	National identity card number or Passport number					
	Personal Identification Number (where applicable)					
	Nationality(ies)					
	Date of birth *[dd/mm/yyyy]*					
	Postal address					
	Residential address					
	Telephone number					
	Email address					
	Occupation or profession					
3. **e.t .c**						

II) Am fully aware that beneficial ownership information above shall be reported to the Public Procurement Regulatory Authority together with other details in relation to contract awards and shall be maintained in the Government Portal, published and made publicly available pursuant to Regulation 13(5) of the Companies (Beneficial Ownership Information) Regulations, 2020.(Notwithstanding this paragraph Personally Identifiable Information in line with the Data Protection Act shall not be published or made public). *Note that Personally Identifiable Information (PII) is defined as any information that can be used to distinguish one person from another and can be used to deanonymize previously anonymous data. This information includes National identity card number or Passport number, Personal Identification Number, Date of birth, Residential address, email address and Telephone number.*

III) In determining who meets the threshold of who a beneficial owner is, the Tenderer must consider a natural person who in relation to the company:

(a) holds at least ten percent of the issued shares in the company either directly or indirectly;

(b) exercises at least ten percent of the voting rights in the company either directly or indirectly;

(c) holds a right, directly or indirectly, to appoint or remove a director of the company; or

(d) exercises significant influence or control, directly or indirectly, over the company.

IV) What is stated to herein above is true to the best of my knowledge, information and belief.

Name of the Tenderer: .....[insert complete name of the Tenderer]_____*

*Name of the person duly authorized to sign the Tender on behalf of the Tenderer: ** [insert complete name of person duly authorized to sign the Tender]*

Designation of the person signing the Tender: ..... [insert complete title of the person signing the Tender]

Signature of the person named above: ..... [insert signature of person whose name and capacity are shown above]

Date this ..... [insert date of signing] day of..... [Insert month], [insert year]

Bidder Official Stamp

Public Procurement Regulatory Authority (PPRA)
KISM Towers, 6th Floor, Ngong Rd
P.O Box 58535- 00200, Nairobi Kenya
Telephone: +254 020 3244000, 2213106/7
Email: info@ppra.go.ke
Website: www.ppra.go.ke

Website: www.ppra.go.ke